INSTRUCTION MANUAL

Type 1192/Z

Counter

GENERAL RADIO

EBAMAN.COM

preserving our technical legacy

This manual is provided FREE OF CHARGE from EBAMAN.COM as a service to the technical community.

It was uploaded by someone who wanted to help you repair and maintain your equipment.

If you paid for this manual, you paid someone who is making a profit from the free labor of others without asking their permission.

Thousands of files are available without charge from: EBAMAN.COM

Visit us at http://ebaman.com

This file was provided by:
Jerry Ingordo W2JI

Contents

SPECIFICATIONS
CONDENSED OPERATING INSTRUCTIONS
INTRODUCTION – SECTION 1
INSTALLATION – SECTION 2
OPERATION – SECTION 3
THEORY – SECTION 4
SERVICE AND MAINTENANCE – SECTION 5
PARTS LISTS AND DIAGRAMS – SECTION 6

WARRANTY

We warrant that each new instrument manufactured and sold by us is free from defects in material and workmanship and that, properly used, it will perform in full accordance with applicable specifications for a period of two years after original shipment. Any instrument or component that is found within the two-year period not to meet these standards after examination by our factory, District Office, or authorized repair agency personnel will be repaired or, at our option, replaced without charge, except for tubes or batteries that have given normal service.

Type 1192/Z

Counter

©GENERAL RADIO COMPANY 1969
West Concord, Massachusetts, U.S.A. 01781
Form No. 1192-0100-A
December, 1969
ID-B100

1192-Z Operating Instructions

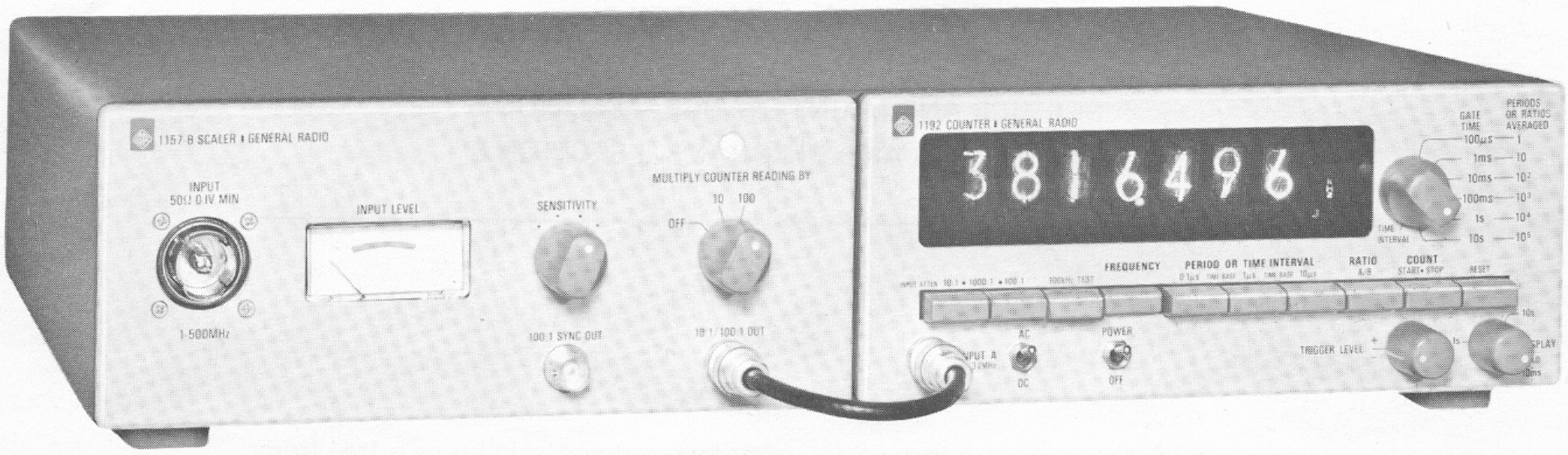

To operate the 1192-Z Counter, proceed as follows:

a. Connect the 6-in. coaxial cable supplied (P/N 0776-2000) with the 1192-Z between the 10:1/100:1 OUT connector on the 1157-B Scaler and the INPUT A connector on the 1192 Counter.

b. Check that the line-voltage switches on both the scaler and counter are each in the proper position for the voltage available.

c. Connect the power cords supplied between the power source and the instruments.

d. Turn the 1157 SENSITIVITY control left to its stop, initially.

e. Connect the signal to be measured to the INPUT connector (maximum level, 7 V rms).

f. Set the MULTIPLY COUNTER READING BY switch to the desired ratio. The pilot light should glow.

g. Turn the SENSITIVITY control cw, as required, to obtain an indication in the green sector of the INPUT LEVEL meter. More detailed instructions are given in the 1157 Instruction Manual, Operation Section.

h. Set the AC-DC switch to the AC position on the 1192 Counter.

i. Set the INPUT ATTEN buttons to 10:1 or 100:1.

j. Center the TRIGGER LEVEL control.

k. Set the POWER-OFF switch to the POWER position.

l. Set the range switch to the desired counting time or number of periods or ratios averaged.

m. Set the DISPLAY control to the desired display time.

n. Depress the desired measurement pushbutton. If a TIME INTERVAL measurement is to be made, set the range switch to TIME INTERVAL and depress one of the TIME INTERVAL pushbuttons. If a COUNT measurement is to be made, do not depress the COUNT pushbutton until it is desired to start the measurement. If a RATIO measurement is to be made, connect the second signal (lower frequency) to the INPUT B connector on the rear panel of the 1192. If an external standard frequency is to phase lock the counter, connect it to INPUT B and set the EXT TIME BASE switch to the proper position. A RATIO measurement and a phase-locked counter can not exist at the same time.

o. Depress the STORAGE pushbutton on the rear panel if the storage mode is not desired, but leave it unlatched if storage is desired.

p. Connect any desired data-reading instruments to the optional DATA OUTPUT connector on the rear panel of the 1192.

q. Depress the RESET button, release it and read the answer to the measurement (remember to allow for the X10 or X100 scaling factor) on the front-panel visual registers, after the amount of time set on the range switch has elapsed. Measurements will continue to be made if the DISPLAY control is in any position except HOLD. If a measurement reading does not appear or is erratic, check that the scaler INPUT LEVEL reading is in the green range and adjust the TRIGGER LEVEL control or decrease the INPUT ATTEN setting on the counter.

More detailed counter instructions are given in the 1192 Operation section of this manual.

Condensed Operating Instructions

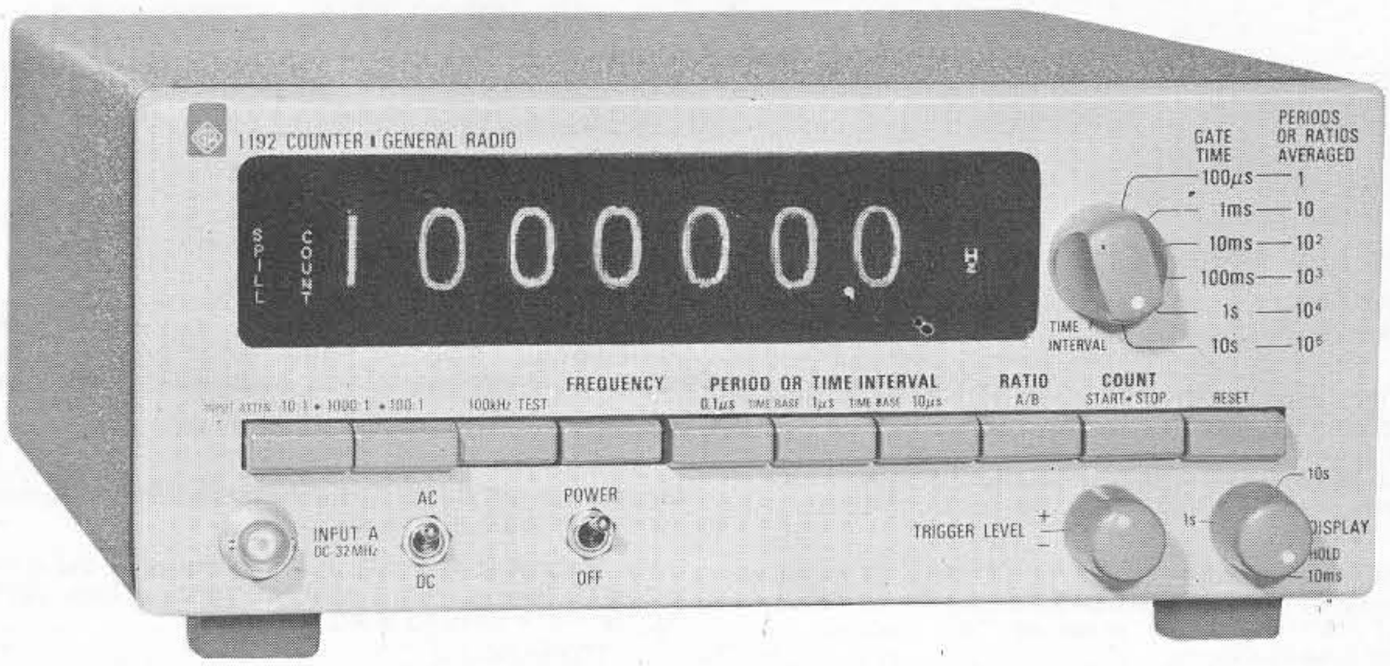

Type 1192 Counter (P/N 1192-9708).

To perform a measurement with the 1192 Counter, proceed as follows:

a. Connect the input signal to be measured to the INPUT A connector (use INPUT ATTEN pushbuttons, if necessary). If a RATIO measurement is to be made, connect the second signal to the INPUT B connector. If an external standard frequency is to phase lock the counter, connect it to INPUT B and set the EXT TIME BASE switch to the proper position.

b. Check that the line-voltage switch is in the proper position.

c. Set the AC-DC switch to the desired position.

d. Set the INPUT ATTEN buttons to 10:1 or 100:1.

e. Center the TRIGGER LEVEL control.

f. Switch the POWER-OFF switch to the POWER position.

g. Set the range switch to the desired counting time or number of periods or ratios averaged.

h. Set the DISPLAY control to the desired display time.

i. Depress the desired measurement pushbutton. If a TIME INTERVAL measurement is to be made, set the range switch to TIME INTERVAL and depress one of the TIME INTERVAL pushbuttons. If a COUNT measurement is to be made, do not depress the COUNT pushbutton until it is desired to start the measurement.

j. Depress the STORAGE pushbutton on the rear panel, if the storage mode is not desired, but leave it unlatched if storage is desired.

k. Connect any desired data-reading instruments to the optional DATA OUTPUT connector on the rear panel. The decimal point and range information will not be printed out, just the numerals of the answer.

l. Depress the RESET button, release it and read the answer to the measurement on the front-panel visual registers, after the amount of time set on the range switch has elapsed. Measurements will continue to be made if the DISPLAY control is in any position except HOLD. If a measurement reading does not appear or is erratic adjust the TRIGGER LEVEL control or decrease the INPUT ATTEN setting.

Specifications

MEASUREMENT RANGES AND ACCURACY

Frequency: Dc to 32 MHz; 100-μs to 10-s counting gate times; displays Hz, kHz, MHz units with positioned decimal point. Accuracy, $\pm$ 1 count $\pm$ time-base accuracy.

Period: To 100 s in 7-digit model (10 s in 6-digit, 1 s in 5-digit models) with 0.1-μs resolution; single and multiple period to 10^5; displays μs, ms, ns with positioned decimal point; counts 10-MHz time base, 1 MHz, and 100 kHz. Accuracy, depends on signal-to-noise ratio of input signal, input noise, and the $\pm$ 1-count error (see note).

Frequency Ratio: 1 to 10^5. Frequency "A", dc to 32 MHz, is measured over 1 to 10^5 periods of frequency "B", 50 Hz to 10 MHz. Accuracy, $\pm$ 1 count of "A" $\pm$ trigger error of "B" divided by number of ratios counted (see note).

Note — Trigger error in time measurements: $\pm$0.3% of one period $\div$ number of periods averaged, for a 40-dB input signal-to-noise ratio. This assumes no noise internal to the counter. For input signals of extremely high signal-to-noise ratio, the trigger error in μs will be $<$0.0003 $\div$ the signal slope in V/μs.

Time Interval: 0.1 μs to 100 s (to 10 s and 1 s in 6-digit and 5-digit models) measured by counting 10-, 1-, or 0.1-MHz signal from internal clock; displays ms with positioned decimal point. Accuracy, $\pm$ 1 count $\pm$ time-base accuracy. Interval measured is between separate commands supplied to "start" and "stop" BNC connectors on rear panel. Measures duration of pulse applied to "start" terminal with "stop" terminal grounded. Storage is disabled in this mode.

Count: Register capacity, 10^7, 10^6, 10^5 depending on model. Events at up to 32-MHz rate accumulated between start/stop commands from manual panel button, or externally between separate "start" and "stop" commands applied to rear BNC connectors or only during "start" command pulse with "stop" terminal grounded.

INPUT

Frequency: Channel "A", dc to 32 MHz (3 Hz to 32 MHz ac-coupled); channel "B", 50 Hz to 10 MHz.

Sensitivity: Channel "A", 10 mV rms (sine wave) dc to 20 MHz, 20 mV rms to 32 MHz; channel "B", 100 mV rms (sine wave) 400 Hz to 10 MHz, 1 V rms down to 50 Hz. "A" trigger level adjustable $\pm$ 100 mV, "B" trigger level fixed; "A" slope negative-going, "B" slope positive-going.

Attenuator: Channel "A" only, x1, x10, x100, x1000 (0, 20, 40, 60 dB). Low-capacitance 10:1 probe available.

Voltage Rating: Input should not exceed 400 V pk ac or dc, channel "A". Channel "B" input should not exceed 400 V dc or 80 V rms.

Impedance (all attenuator settings): "A" approx 1 MΩ shunted with 27 pF. With low-capacitance probe, 10 MΩ shunted with 7 pF. Channel "B" approx 10 kΩ shunted with 20 pF.

Start/Stop Inputs: Contact closure to ground or saturated NPN transistor capable of 6-mA max sink, or pulse input with data "0" $<$+0.3 V and data "1" $>$+2.0 V; should not exceed 1 W into 50 Ω ($-$7 V dc and +12 V dc or $\pm$ 70 V for short, 1%-duty-ratio pulses).

10-MHZ TIME BASE

Stability: $<\pm 2 \times 10^{-6}$ per month. Room-temperature crystal coefficient, $<3 \times 10^{-7}$/°C from 0° to 55°C, total drift from 0° to 55°C $<4 \times 10^{-6}$. With 10% line-voltage variation, $<2 \times 10^{-8}$.

Manual Adjustment Range: $\pm$ 1 x 10^{-5} with internal control.

Internal Phase Lock: Time-base oscillator can be locked to external standard frequencies at 1 MHz and 100 kHz of $\geq$100 mV rms into 10kΩ. Lock range is wider than $\pm$1 x 10^{-5}.

DATA PRESENTATION

Display: 5, 6, or 7 digits, long-life, high-intensity neon readout with automatically positioned decimal point and measurement dimensions. Also on panel, spill indicator that lights if register capacity is exceeded, and a counting indicator light.

Storage: Display and spill-indicator can be either stored or not, as controlled by rear panel push button.

Measurement Rate: Time between measurements adjustable from 10 ms to $>$10 s and ∞.

Data Output (optional): Fully buffered 1-2-4-8 BCD output at standard DTL levels (9-mA sink current). Data "0" is 0.5 V max, data "1" is +5 V behind 6 kΩ.

GENERAL

Environmental Operating Range: 0 to 55°C ambient.

Power Required: 100 to 125, 200 to 250 V, 50 to 400 Hz, 22 W.

Accessories Available: 1157-B Scaler for extending frequency range to 500 MHz, data printer, digital-to-analog converter, and digital-data acquisition equipment. Also low-capacitance 10:1 Input Probe 1158-9600.

Mounting: Convertible-bench cabinet, rack mount.

Dimensions (width x height x depth): Bench, 8½ x 3⅞ x 13½ in. (220 x 99 x 345 mm); rack, 19 x 3½ x 12¾ in. (485 x 89 x 325 mm).

Weight: Net, 7½ lb (3.5 kg); shipping (est) 11 lb (5 kg).

Specifications (1192-Z)

1192-Z specifications are same as for 1192 except:

Frequency: Dc to 500 MHz.
INPUT (to 1157-B Scaler, for frequencies above 32 MHz.
Minimum Amplitude: 0.3 V pk-pk (0.1 V rms), most sensitive range.
Maximum Signal: 7 V rms (1 W).
Impedance: AC-coupled, 50 Ω.

GENERAL

Power Required: 100 to 125 or 200 to 250 V, 50 to 400 Hz, 36 W.

Dimensions (width x height x depth): Bench, 17 x 3⅞ x 14 in. (435 x 99 x 355 mm); rack, 19 x 3½ x 12¾ in. (485 x 89 x 325 mm).

Weight: Net, 14 lb (6.5 kg); shipping (est), 18 lb (8.5 kg).

Catalog Number	Description
	1192 Counter (32 MHz), Bench models 5-digit readout 6-digit readout 7-digit readout
	1192-Z Counter (500 MHz, incl Scaler) Bench models 5-digit readout 6-digit readout 7-digit readout
	Options for 1192 and 1192-Z Option 1 Relay rack mounting Option 2 BCD Data Output
1158-9600	**P6006 Probe,** Tektronix Catalog No. 010-0127-00 (not sold separately)

PATENT NO. 3,328,564

Introduction–Section 1

1.1 PURPOSE 1-1
1.2 DESCRIPTION 1-1
1.3 CONTROLS, CONNECTORS AND INDICATORS 1-1
1.4 ACCESSORIES SUPPLIED 1-1
1.5 EQUIPMENT AVAILABLE 1-1
1.6 PATCH CORDS AND ADAPTORS 1-5

1.1 PURPOSE.

The 1192 is a general-purpose, dc to 32-MHz counter-timer for the measurement of frequency, period, frequency ratio, time interval, and number of events.

1.2 DESCRIPTION.

The counter employs a five-, six-, or seven-digit visual register comprised of high-intensity gas-readout tubes containing 0.510-in. high digits, with automatic display of decimal point and measurement dimensions. An internal storage feature provides a continuous display of corrected data without flicker.

Models are available with high-speed buffered 1-2-4-8 BCD outputs from the internal storage to drive auxiliary data-handling equipment.

INPUT A has a high-impedance, low-noise FET circuit preceded by a four-position step attenuator. Controls for trigger level, polarity, and coupling are also provided. The 1-MΩ input impedance of INPUT A is independent of control settings and thus permits the use of general-purpose, low-capacitance oscilloscope probes.

INPUT B has a 10-kΩ input impedance, 50-Hz to 10-MHz frequency range and a fixed trigger level.

1.3 CONTROLS, CONNECTORS AND INDICATORS.

Figure 1-1 shows and Table 1-1 identifies the front-panel controls, connectors and indicators. Figure 1-2 shows and Table 1-2 identifies the rear-panel controls and connectors.

1.4 ACCESSORIES SUPPLIED.

Table 1-3 lists the accessories supplied with the 1192 Counter.

1.5 EQUIPMENT AVAILABLE.

1.5.1 500-MHz Frequency Range.

To extend the upper frequency to 500 MHz, the counter can be used with the 1157-B Scaler. The scaler is a completely self-contained 500-MHz direct-counting frequency divider with 10:1 and 100:1 division. Together with this prescaler, (Figure 1-3) the 1192 frequency range is extended to 320 MHz in the 10:1 position and 500 MHz in the 100:1 position. The input sensitivity of the prescaler is better than 100 mV rms and 300 mV pk-pk.

1.5.2 Signal Scanning.

To automatically and sequentially connect a number of signals for measurement, the counter can be used with the 1770 Scanner System. The scanner selects one of up to 100 signals (dc to 100 MHz) and presents it to the counter for measurement. The number of channels, the number of lines switched per channel, and the line terminations can be varied to suit the application and a high-temperature cable (−75 to +250°C) can be supplied to connect to components in an environmental chamber.

1.5.3 Greater Accuracy.

For greater stability and accuracy, the counter can be used with the 1115 Standard-Frequency Oscillator. The oscillator provides an output of 1 V rms into 50 Ω at frequencies of 100 kHz, 1 MHz, and 5 MHz. The oscillator signal is fed into INPUT B to phase lock the counter oscillator.

1.5.4 Digital Recording.

For digital records of the measurement data, counters with the data output option can be used with the 1137 Data Printer. The printer records up to twelve columns at print rates up to three lines per second.

1.5.5 Analog Output and X-Y Recording.

For analog measurement data, counters with the data output option can be used with the 1136 Digital-to-Analog Converter. The converter changes the digital data from the counter to a voltage or current proportional to the numerical value of any three consecutive digits or the last two digits of data. Storage circuits in the converter permit use with intermittent as well as continuous BCD data. If an X-axis input is provided, an X-Y recorder can then be used to record the measurements vs temperature or voltage, etc.

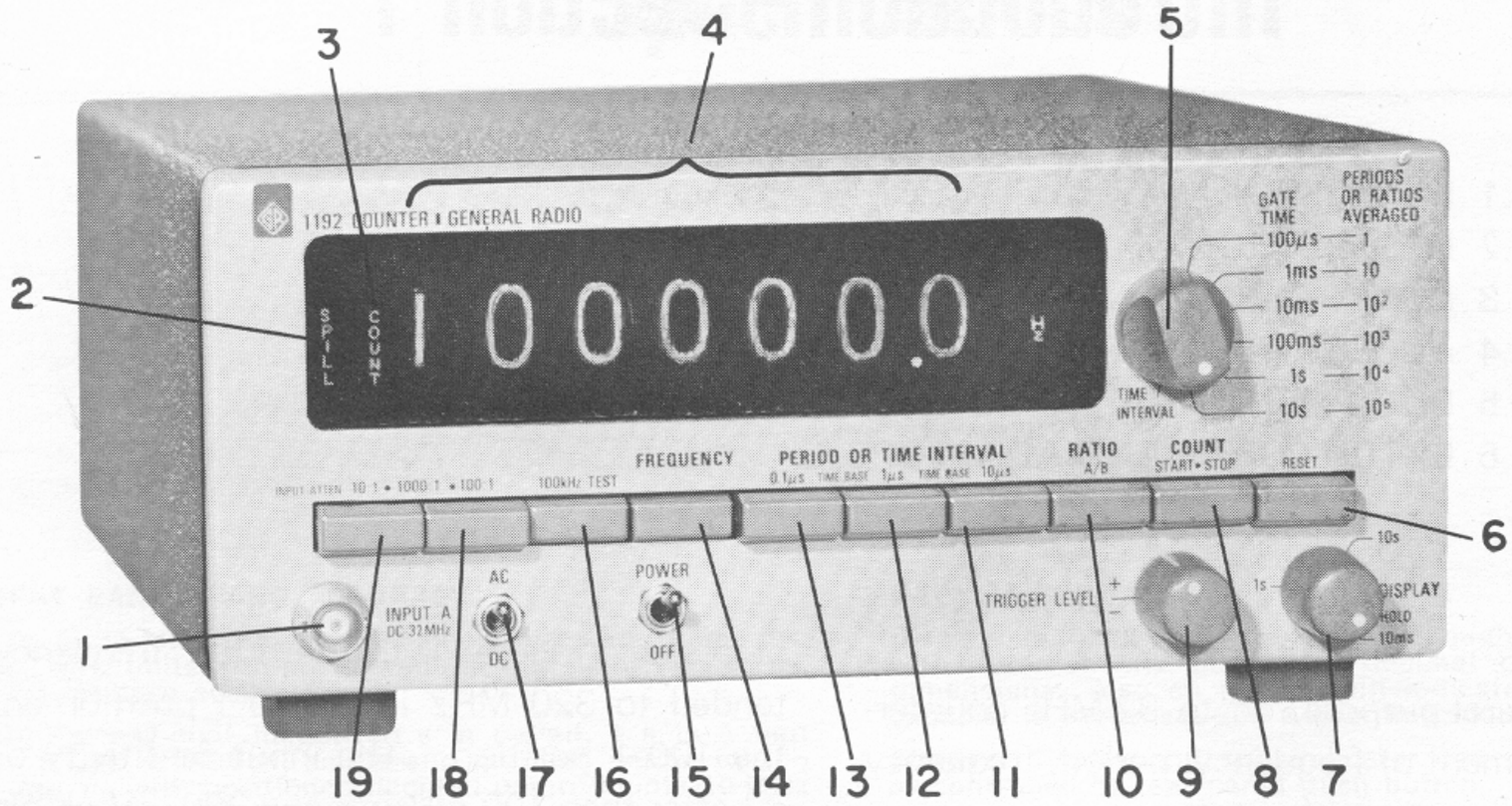

Figure 1-1 Front-panel controls, connectors and indicators (P/N 1192-9708).

Table 1-1

FRONT-PANEL CONTROLS, CONNECTORS, AND INDICATORS

Fig. 1-1 Ref.	Name	Description	Function
1	INPUT A DC-32 MHz	BNC connector, socket (A-J1)	Input signal connector for channel A.
2	SPILL	Incandescent lamp	Lights when most significant digit is greater than nine, indicating overflow.
3	COUNT	Incandescent lamp	Lights when measurement is in progress.
4	– – – –	Visual register	High-intensity gas readout tubes that provide visual indication of measurement value, including the decimal point.
5	Range	Seven-position range switch (C-S1)	Used to set GATE TIME, PERIODS OR RATIOS AVERAGED or TIME INTERVAL.
6	RESET	One-position push-button switch (B-S1K)	Resets the counter to zero.

1-2 INTRODUCTION

Table 1-1 (cont)

FRONT-PANEL CONTROLS, CONNECTORS, AND INDICATORS

Fig. 1-1 Ref.	Name	Description	Function
7	DISPLAY	Rotary knob control with switch at ccw end (A-R1, A-S4)	Establishes the time for the display before the next measurement is taken.
8	COUNT START–STOP	Two-position push-button switch (B-S1J)	Initiates count measurements when depressed; terminates count measurement when released.
9	TRIGGER LEVEL	Rotary knob control (A-R2)	Sets trigger level of INPUT A signal.
10	RATIO A/B	Two-position push-button switch (B-S1H)	Causes counter to measure the ratio between the INPUT A and B signals when depressed.
	PERIOD OR TIME INTERVALS		
11	10 μs	Two-position push-button switch (B-S1G)	Causes counter to measure the period or time interval at 10 μs increments when depressed.
12	1 μs	Two-position push-button switch (B-S1F)	Causes counter to measure the period or time interval at 1 μs increments when depressed.
13	0.1 μs	Two-position push-button switch (B-S1E)	Causes counter to measure the period or time interval at 0.1 μs increments when depressed.
14	FREQUENCY	Two-position push-button switch (B-S1D)	Causes counter to measure the frequency of the INPUT A signal when depressed.
15	POWER-OFF	Two-position toggle switch (A-S1)	Applies line voltage to instrument.
16	100 kHz TEST	Two-position push-button switch (B-S1C)	Applies a 100-kHz signal internally to the counter for checking its operation.
17	AC – DC	Two-position toggle switch (A-S2)	Selects either ac or dc coupling for the INPUT A signal.
	INPUT ATTEN		
18	100:1	Two-position push-button switch (B-S1B)	Attenuates the INPUT A signal 100:1 when depressed.
19	10:1	Two-position push-button switch (B-S1A)	Attenuates the INPUT A signal 10:1 when depressed.
—	1000:1	Depress both the 100:1 and 10:1 switches.	Attenuates the INPUT A signal 1000:1

Table 1-2
REAR-PANEL CONTROLS AND CONNECTORS

Fig. 1-2 Ref.	Name	Description	Function
1	FUSE	Extractor-post fuse holder (A-F1)	Contains 4/10-A fuse for 100- to 125-V operation.
2	FUSE	Extractor-post fuse holder (A-F2)	Contains 2/10-A fuse for 200- to 250-V operation.
3	100 V-125 V, 200 V-250 V, 50-400 Hz	Two-position slide switch, screwdriver operated (A-S3)	Selects line voltage.
4	DATA OUTPUT	Fifty-pin connector (optional) accepts Cinch or Amphenol P/N 57-30500 Multiple Plug (D-J1)	Supplies 1-2-4-8 BCD measurement data and control signals to external equipment (Figure 2-3).
5	INPUT B	BNC connector, jack (A-J3)	Input connector for channel B. Used for ratio measurements or external oscillator locking.
6	STOP	BNC connector, jack (A-J4)	Accepts a negative pulse to stop TIME INTERVAL measurement or close the gate after a COUNT measurement.
7	START	BNC connector, jack (A-J5)	Accepts a negative pulse to start a TIME INTERVAL measurement or open the gate for a COUNT measurement.
8	EXT TIME BASE 100 kHz (IN) 1 MHz (OUT)	Two-position push-button switch (B-S2B)	When switch is depressed the internal oscillator will lock to a 100-kHz signal applied to INPUT B. When in the released position, the internal oscillator will lock to a 1-MHz signal applied to INPUT B.
9	STORAGE ON (OUT) OFF (IN)	Two-position push-button switch (B-S2A)	When STORAGE switch is unlatched storage circuits are activated and the measurement is displayed during the display cycle as well as the measurement cycle. When depressed the storage circuits are disabled and the count will be displayed according to the front-panel DISPLAY switch.
10	—	Power plug, 3-wire (A-J2)	Accepts 3-wire ac line cord to power instrument.

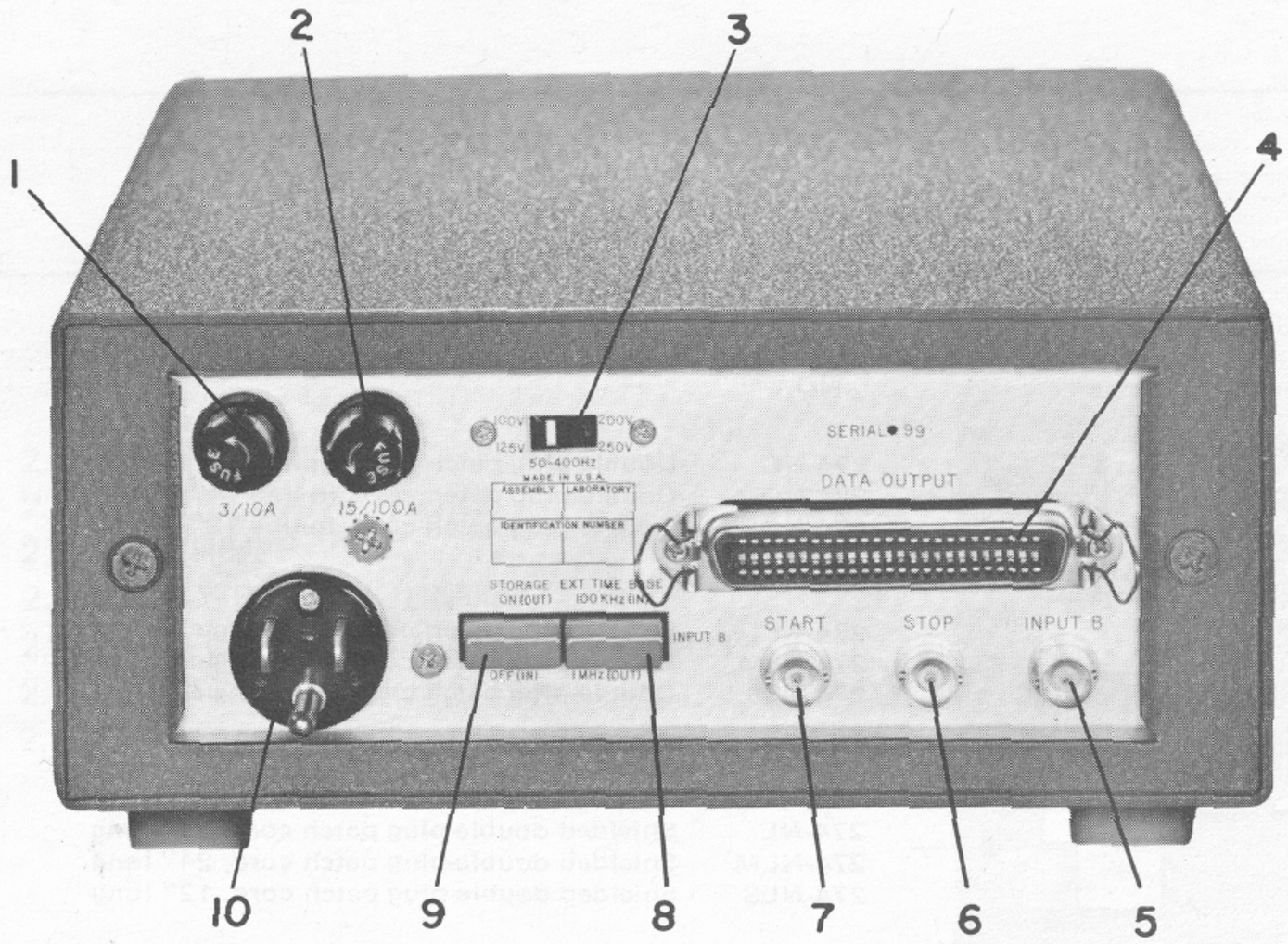

Figure 1-2 Rear-panel controls and connectors (P/N 1192-9710).

Table 1-3

ACCESSORIES SUPPLIED

Name	Description	GR Part Number
Power Cord	7-foot, 3-wire	4200-9622
Rack Adaptor Set*	————	0480-9722

*Supplied with rack-mount instruments only.

1.5.6 DC Recording.

For dc records of the measurement data, counters with the data output option can be used with the 1136 Digital-to-Analog Converter and a 1521 Graphic Level Recorder. The recorder provides a 4-in. wide continuous recording with an accuracy of ±1% full scale, a resolution of ±0.25% of full scale, and recording speeds of from 2.5 in. per hour to 75 in. per minute.

1.5.7 *Systems.*

Since additional equipment can expand the basic capability of the 1192 Counter to a complete measurement facility, General Radio has arranged to supply complete systems and inquiries are invited. Each system is custom tailored to individual requirements and includes only the equipment necessary to perform the required task; completely assembled and checked as a unit.

Such systems have wide application and can be used for laboratory development, production monitoring, final quality assurance, production-lot sorting, incoming inspection, environmental testing, reliability evaluation, etc., on an automatic or semi-automatic basis.

1.5.8 Line-Voltage Regulation.

The GR 1591 Variac® Automatic Voltage Regulator is available to stabilize the line-voltage input.

1.6 *PATCH CORDS AND ADAPTORS.*

Table 1-4 lists some General Radio patch cords and adaptors that can be used with the 1192. Consult the latest General Radio Catalog for a complete list.

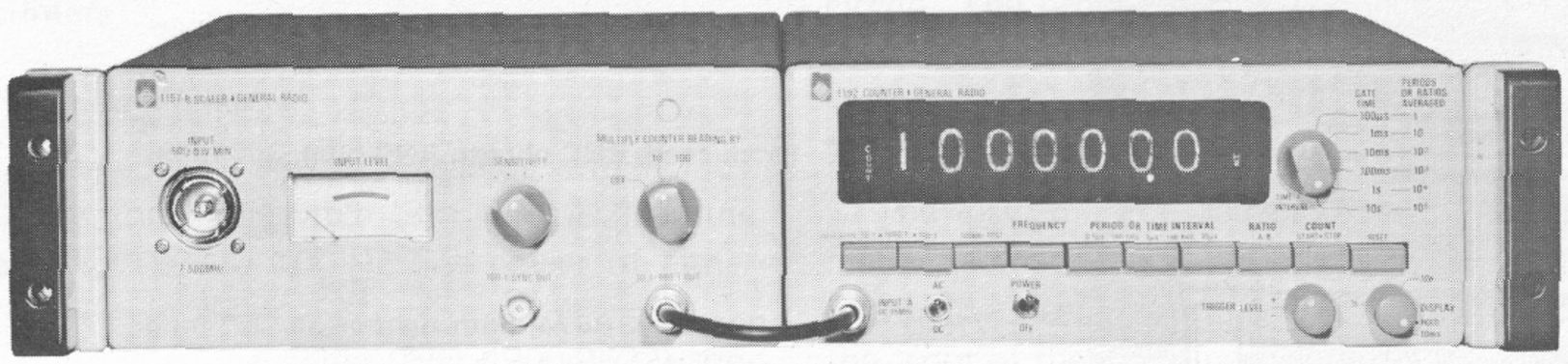

Figure 1-3 1192 Counter and 1157-B Scaler in a rack-mount configuration.

Table 1-4

AVAILABLE INTERCONNECTION ACCESSORIES

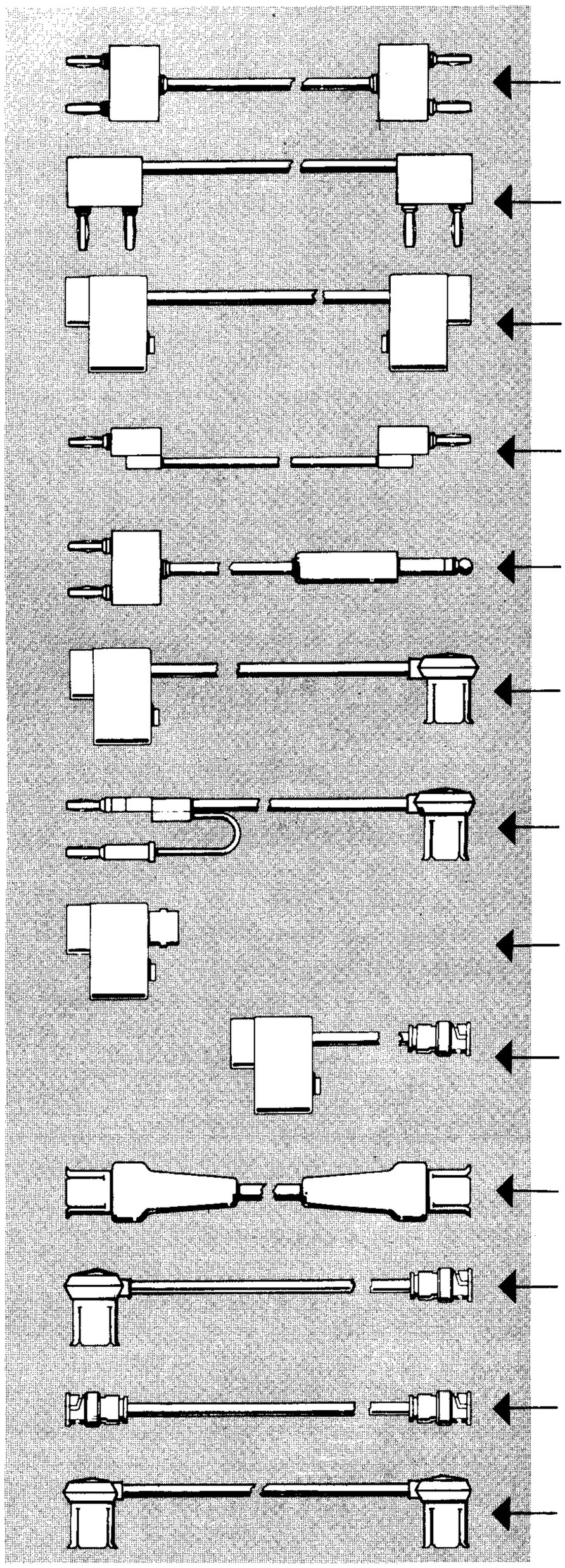

TYPE NO.	DESCRIPTION	CATALOG NO.
274-NQ	Double-plug patch cord, in-line 36" long	0274-9860
274-NQM	Double-plug patch cord, in-line 24" long	0274-9896
274-NQS	Double-plug patch cord, in-line 12" long	0274-9861
274-NP	Double-plug patch cord, right-angle 36" long	0274-9880
274-NPM	Double-plug patch cord, right-angle 24" long	0274-9892
274-NPS	Double-plug patch cord, right-angle 12" long	0274-9852
274-NL	Shielded double-plug patch cord, 36" long	0274-9883
274-NLM	Shielded double-plug patch cord, 24" long	0274-9882
274-NLS	Shielded double-plug patch cord, 12" long	0274-9862
274-LLB	Single-plug patch cord, black, 36" long	0274-9468
274-LLR	Single-plug patch cord, red, 36" long	0274-9492
274-LMB	Single-plug patch cord, black, 24" long	0274-9847
274-LMR	Single-plug patch cord, red, 24" long	0274-9848
274-LSB	Single-plug patch cord, black, 12" long	0274-9849
274-LSR	Single-plug patch cord, red, 12" long	0274-9850
1560-P95	Adaptor cable, double-plug to telephone plug, 36"	1560-9695
874-R34	Coaxial patch cord, double plug to GR874, 36" long	0874-9692
874-R33	Coaxial patch cord, two plugs to GR874, 36" long	0874-9690
274-QBJ	Adaptor, shielded double plug to BNC jack	0274-9884
776-A	Patch cord, shielded double plug to BNC plug, 36" long	0776-9701
874-R22A	Coaxial patch cord GR874 to GR874, 36" long	0874-9682
776-B	Patch cord, GR874 (right-angle) to BNC plug, 36" long	0776-9702
776-C	Patch cord, BNC plug to BNC plug, 36" long	0776-9703
776-D	GR874 to GR874, both right-angle, 36" long	0776-9704

274-13X

2-69

Installation—Section 2

2.1 DIMENSIONS 2-1
2.2 POWER CONNECTIONS 2-1
2.3 BENCH USE 2-1
2.4 RELAY-RACK MOUNTING 2-1
2.5 DATA OUTPUT SOCKET (OPTIONAL) 2-3
2.6 START-STOP CONNECTION 2-4
2.7 LINE VOLTAGE REGULATION 2-4

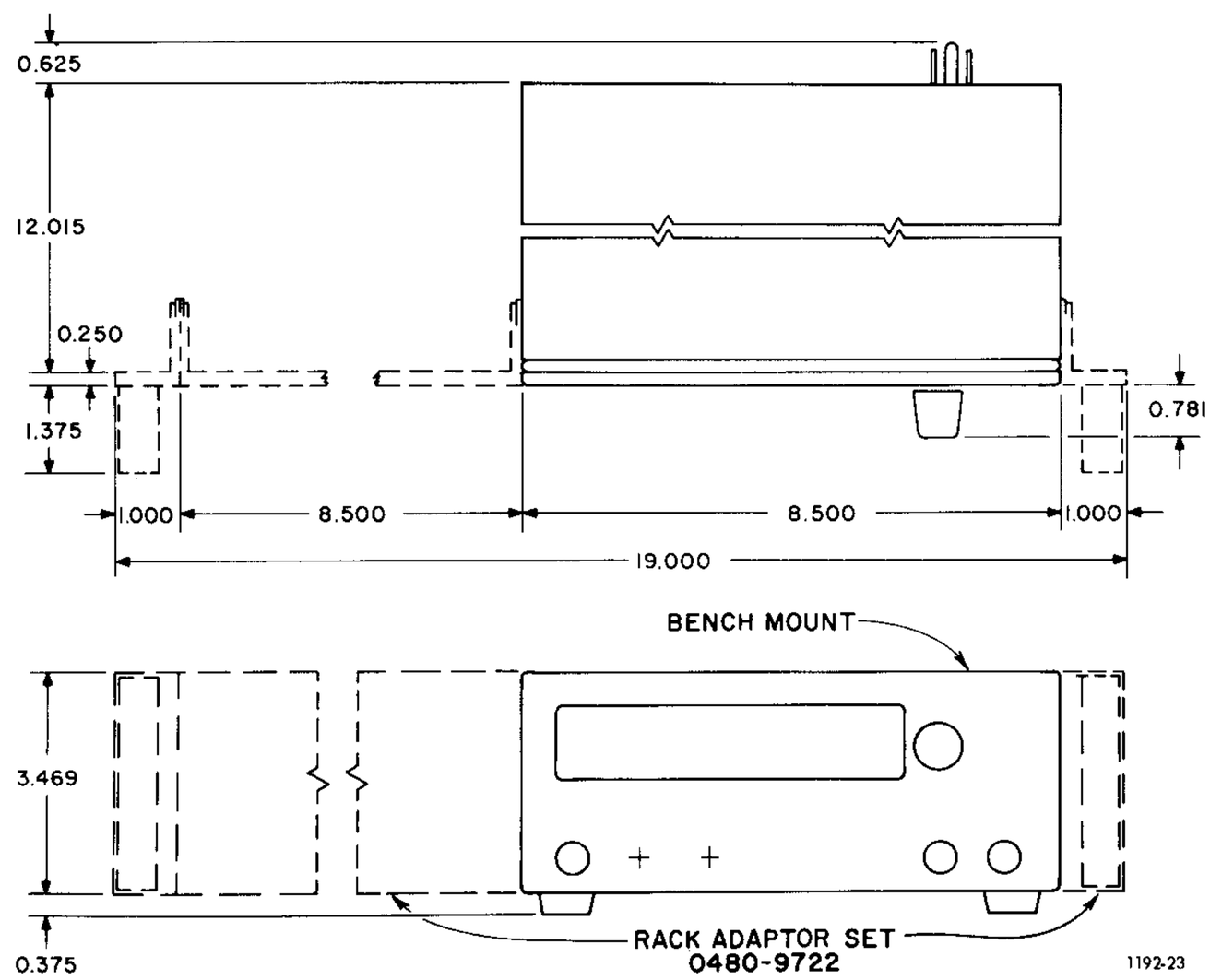

Figure 2-1 Dimensions of the 1192 Counter (inches).

2.1 DIMENSIONS.

Figure 2-1 shows the dimensions of both the bench- and rack-mount counter.

2.2 POWER CONNECTIONS.

The wiring of the power transformer can be switched, by means of the 2-position slide switch (3, Figure 1-2) on the rear panel, to accept 50- to 400-Hz line power of either 100- to 125-V or 200- to 250-V.

Connect the 3-wire power cable (P/N 4200-9622) supplied to the line and to the 3-terminal male connector (10, Figure 1-2) on the rear panel. A 0.2-A fuse is used in the 200- to 250-V circuit, a 0.4-A fuse in the 100- to 125-V circuit. The proper fuse is connected by the slide switch. Power consumption is approximately 22 W.

2.3 BENCH USE.

The instrument is delivered completely assembled in a metal cabinet, ready for bench use. A convenient bail, located between the front feet, can be pulled down to raise the front of the instrument and provide a better view of the control settings.

2.4 RELAY-RACK MOUNTING.

2.4.1 Single Instrument and Blank Panel (Figure 2-2).

Rack Adaptor Set (P/N 0480-9722) is available to convert the portable bench model for use in an EIA standard RS-310 19-in. relay rack with universal mounting-hole spacing. Table 2-1 lists the parts included in the Rack Adaptor Set. The conversion procedure is as follows (Figure 2-2):

a. Loosen the two captive 10/32 screws in the rear of the cabinet, near the sides, until the instrument is free; slide the instrument forward, out of the cabinet.

b. Remove the four feet from the cabinet. Simply push out the two rear feet. Spread the bail (A, Figure 2-2) slightly and the two front feet (B) and the bail will drop out. Be sure to save all parts for possible reconversion of the instrument to bench mounting.

c. Push out the plugs from the four bosses (C) on the sides of the cabinet, near the front. Use a hammer and a small punch inside the cabinet to push each plug outward. Do not damage the threads in the threaded holes.

d. Press the subpanel (D) into the blank panel (E), to form a liner for the latter.

e. Attach the short flange of the blank panel to the front of the cabinet (on either side of the cabinet, as desired) using two 5/16-in. screws (F). Note that the screws enter in opposite directions – one from inside the cabinet and one from the flange side, as shown.

f. Pierce and push out the plug in the lower rear boss (G) on the side toward the blank panel only, as shown.

g. Attach one end of the support bracket (H) to the lower rear boss. The bracket must be placed so that the screw passes through a clearance hole, into a tapped hole. Lock the bracket in position with a 5/16-in. screw (J).

h. Attach the other end of the support bracket to the lower, rear hole in the wide flange, as shown, using a 5/16-in. screw (K).

i. Attach one Rack Adaptor Assembly (Q, including handle) to the side of the cabinet opposite the blank panel, using two 5/16-inch screws (L). Again, note that the screws enter in opposite directions, one from inside the cabinet and one from outside. Use the upper and lower holes in the assembly.

j. Attach the other Rack Adaptor Assembly (Q, including handle) to the wide flange on liner (D) and the flange on the blank panel (E). Use two 5/16-in. screws (M) through the two holes in the flange that are nearest the panel and through the upper and lower holes in the assembly. Again, the screws enter in opposite directions.

k. Install the instrument in the cabinet and lock it in place with the two captive screws through the rear panel that were loosened in step a.

l. Place a straight edge across both the instrument panel and the blank panel. Loosen the screw (J) through the slot in the support bracket (H). Exert a slight pressure on the blank panel (E) so that it forms a straight line with the instrument panel, and tighten the screw (J) in the bracket, to lock the panels in this position.

m. Slide the entire assembly into the relay rack and lock it in place with the four 9/16-in. screws (N) with captive nylon cup washers. Use two screws on each side and tighten them by inserting a screwdriver through the holes (P) in the handles.

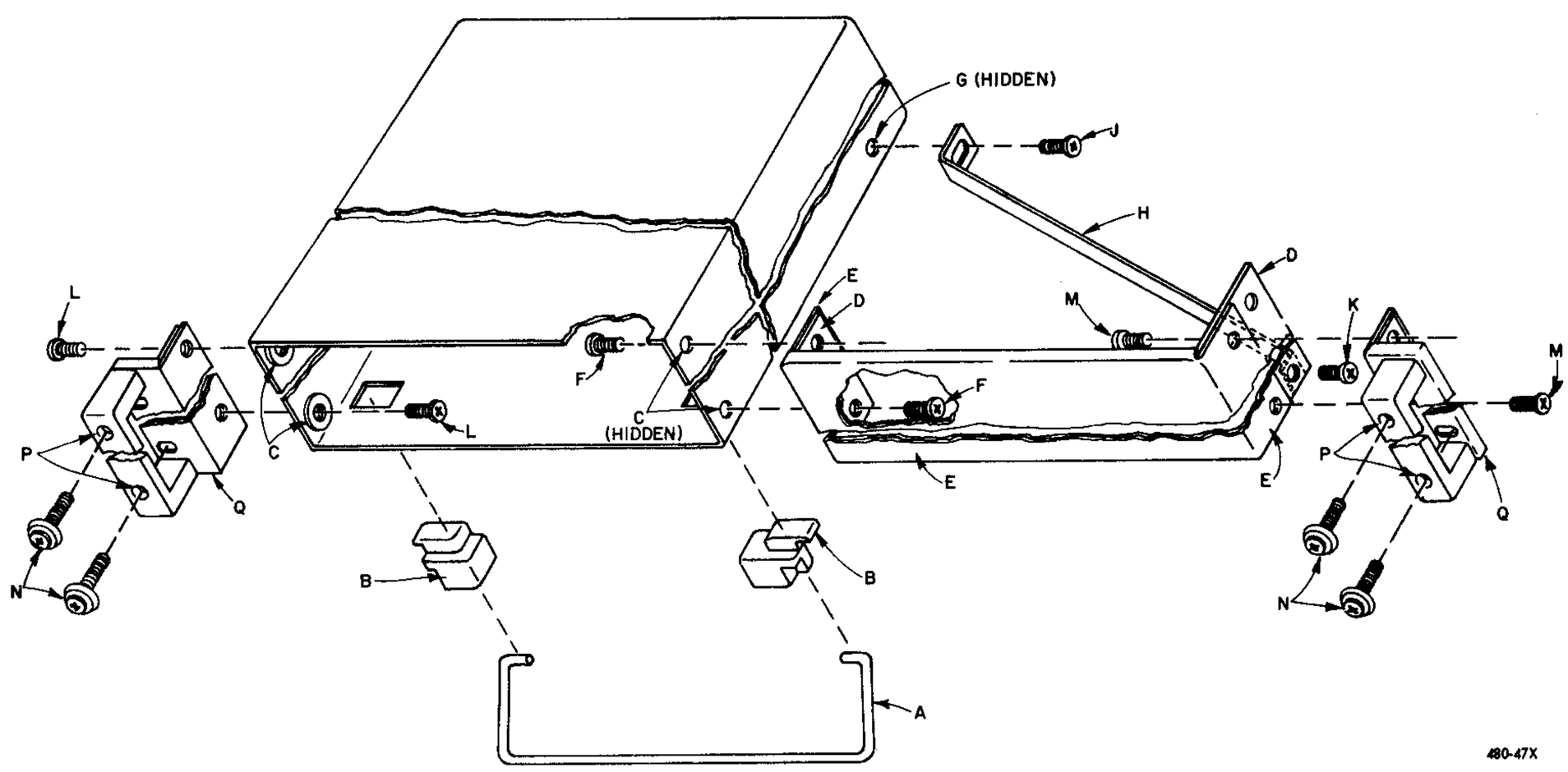

Figure 2-2 Method of mounting the counter and a blank panel in a relay rack.

2-2 INSTALLATION

Table 2-1
PARTS INCLUDED IN THE RACK ADAPTOR SET,
P/N 0480-9722 (Figure 2-2)

Fig. 2-2 Ref.	No. Used	Item	GR Part No.
E	1	Blank Panel	0480-8932
D	1	Sub-Panel	0480-8952
Q	2	Rack Adaptor Assembly	0480-4902
H	1	Support Bracket	0480-8524
—	1	Hardware Set includes	0480-3080
F, J, K, L, M,		8 Screws, Phillips head 10-32, 5/16 in.	
N		4 Screws, Phillips head, 10-32, 9/16 in. with white nylon cup washers	

2.4.2 Reconverting to Portable Bench Mounting.

To reconvert the instrument for bench use, reverse the procedure, first removing the entire assembly installation of instrument, cabinet, and blank panel from the rack.
Next remove:

a. The instrument from its cabinet.

b. The support bracket (H) from the cabinet (Figure 2-2).

c. The blank panel (E) (with handle attached) from one side of the cabinet.

d. The Rack Adaptor Set (handle) from the other side of the cabinet.

Push the two rear feet into the cabinet; slide the bail (A) and two front feet (B) into place. Install the instrument in its cabinet and lock it in place with the two captive screws through the rear panel.

CAUTION

Be careful that the DATA OUTPUT clamps don't get jammed inside the cabinet.

2.4.3 Rack-mounting Two Instruments.

Two instruments of the same panel size (such as two 1192 counters or one 1192 and an 1157-B Scaler 500 MHz) can be mounted side-by-side in a standard 19-in. relay rack. Use the mounting procedure, substituting the second instrument for the blank panel. Do not use the support bracket (H, Figure 2-2), but insert three screws through the bosses in the adjacent sides of the cabinets, two near the front (C) and one near the rear (G). The four feet and the bail must, of course, be removed from each cabinet. Use the four screws (N) with nylon washers to lock the instruments in the rack. The required hardware is listed below:
3 Screws, Phillips head, 10-32, 5/16
4. Screws, Phillips head, 10-32, 9/16 with nylon washers

NOTE

When mounting the 1192 Counter and the 1157-B Scaler side-by-side, the 1157-B should be mounted to the left of the 1192 as seen from the front (Figure 1-3).

2.5 DATA OUTPUT SOCKET (OPTIONAL).

2.5.1 Connections.

Measurement data is available at the DATA OUTPUT socket, D-J1, (Figure 2-3) on the rear panel of instruments with this option, for use by auxiliary data-handling equipment. This socket is a 50-pin Amphenol Type 57 socket which mates with a 50-pin Amphenol Type 57-30500 plug.

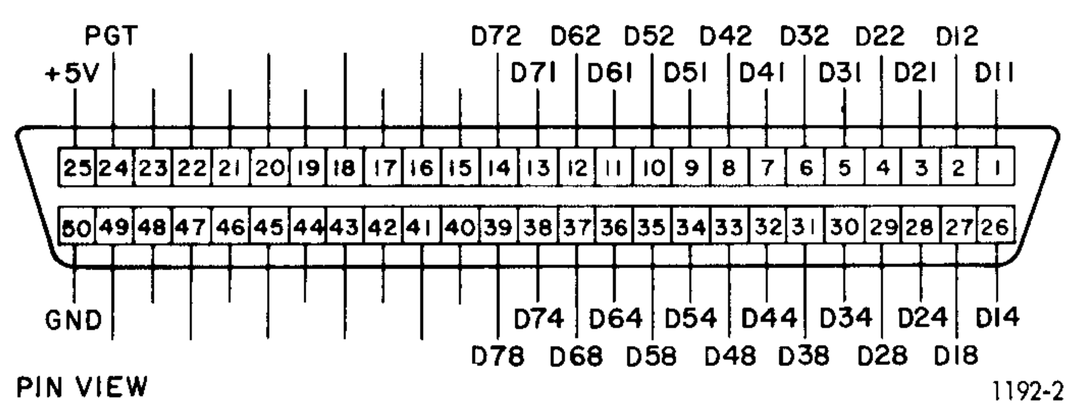

Figure 2-3 Data output socket signals.

Table 2-2
DATA SIGNALS

	7	6	5	4	3	2	1	
	0	1	7	3	7	8	4	
S0901 pin **Signal**	13 **D71**	11 **D61**	9 **D51**	7 **D41**	5 **D31**	3 **D21**	1 **D11**	1-BIT
S0901 pin **Signal**	14 **D72**	12 **D62**	10 **D52**	8 **D42**	6 **D32**	4 **D22**	2 **D12**	2-BIT
S0901 pin **Signal**	38 **D74**	36 **D64**	34 **D54**	32 **D44**	30 **D34**	28 **D24**	26 **D14**	4-BIT
S0901 pin **Signal**	39 **D78**	37 **D68**	35 **D58**	33 **D48**	31 **D38**	29 **D28**	27 **D18**	8-BIT

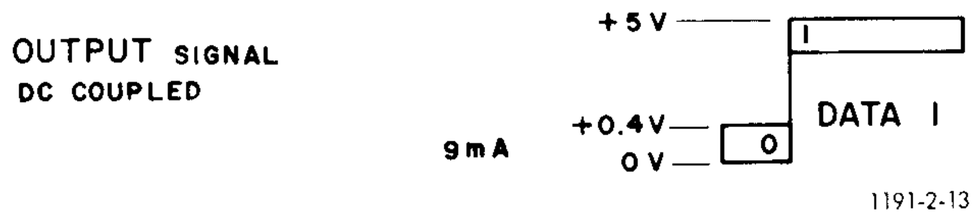

Figure 2-4 DTL levels from the data output socket for signals D11-D78 and PGT.

2.5.2 Data Signals.

Table 2-2 illustrates the data output signals from the various digits of the counter. Four 1-2-4-8 weighted BCD signals are available from each of the decades in the counter at standard DTL levels (data 0 ≈ ground with a 9-mA sink capability, data 1 ≈ +5 V behind 6 kΩ ±20%).

Table 2-3 lists the decimal-BCD equivalents and Figure 2-4 illustrates the dc-coupled output signal.

2.5.3 Print Command Signal.

Figure 2-5 shows the print command signal (PGT) available at D-J1, pin 24. The signal has standard DTL levels as shown in Figure 2-4 (DATA 0 ≅ ground with a 9-mA sink capability and DATA 1 ≅ +5 V behind 6 kΩ ±20%). The PGT signal is in the 1 state during the total display cycle and in the 0 state during the measurement cycle and reset cycle. The minimum time for maximum data transfer is 11 ms.

2.6 START-STOP CONNECTION.

The START and STOP input jacks are used to accept signals to originate and terminate measurements in the time interval mode. These jacks also provide a remote control for opening and closing the gate in the count mode.

When the START jack center terminal is connected to ground, the counter starts to count the interval clock in the time interval mode or the input supplied to the INPUT A jack in the count mode, until the STOP input center terminal is grounded. The START input must be removed before the STOP input is applied and the STOP input must be of less duration then the display time, which can be set from 10 ms to 10 s. If the STOP input is connected to ground permanently, the START input controls the counter and the time interval is measured or the INPUT A signal counted, as long as the START input is connected to ground.

Table 2-3
DECIMAL-BCD EQUIVALENT

Decimal	1-2-4-8 BCD
0	0 0 0 0
1	1 0 0 0
2	0 1 0 0
3	1 1 0 0
4	0 0 1 0
5	1 0 1 0
6	0 1 1 0
7	1 1 1 0
8	0 0 0 1
9	1 0 0 1

2.7 LINE-VOLTAGE REGULATION.

The accuracy of measurements accomplished with precision electronic test equipment operated from ac line sources can often be seriously degraded by fluctuations in primary input power. Line-voltage variations as much as ±5% are commonly encountered, even in laboratory environments. Although most modern electronic instruments incorporate some degree of line-voltage regulation, consideration to possible power-source problems should be given for every instrumentation set-up. The use of line-voltage regulators between power lines and the test equipment is recommended as the only sure way to eliminate the effects on measurement data by low line voltage, transients, and other power phenomena.

The General Radio Type 1591 Variac® Automatic Voltage Regulator is a compact and inexpensive unit capable of holding ac power within ±0.2% accuracy for up to a rack full of solid-state instrumentation. The 1591 possesses a basic capacity of 1 kVA with no distortion of the input waveform. This rugged electromechanical regulator comes in bench or rack-mount configurations, both of which permit direct plug-in of measurement-instrument power cords.

Further details can be found in your GR catalog or in the GR *Experimenter* for October, 1967.

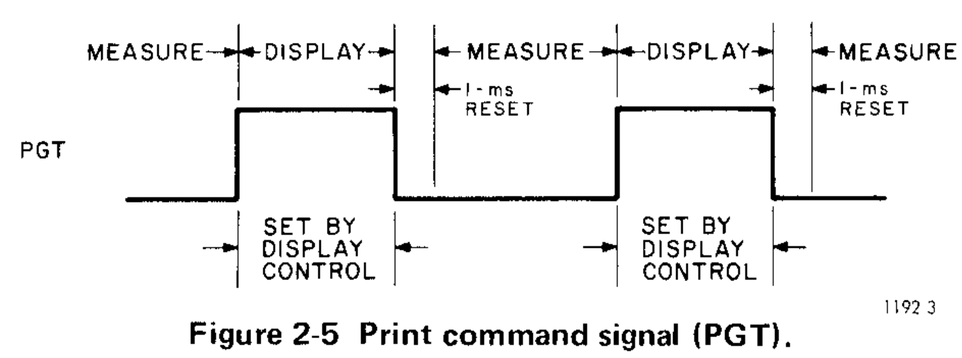

Figure 2-5 Print command signal (PGT).

2-4 INSTALLATION

Operation–Section 3

3.1 OPERATIONAL CHECKS 3-1
3.2 INPUT CONTROLS 3-5
3.3 FREQUENCY 3-8
3.4 PERIOD 3-8
3.5 RATIO 3-9
3.6 COUNT 3-10
3.7 TIME INTERVAL 3-11
3.8 RESET CONTROL 3-12
3.9 DISPLAY CONTROL 3-12
3.10 EXTERNAL TIME BASE 3-12
3.11 100 kHz TEST SIGNAL 3-12
3.12 ACCURACY 3-13
3.13 START AND STOP INPUTS 3-15

CAUTION

Do not exceed maximum signal ratings (INPUT A, 400 V dc or 400 V ac pk; INPUT B, 400 V dc or 80 V ac pk).

3.1 OPERATIONAL CHECKS.

3.1.1 General.

This procedure can be used for incoming inspection, operator familiarization, or as a periodic check on the operation of the instrument. Table 3-1 lists the external-equipment needed for these checks.

3.1.2 Character Indication.

Set the controls as follows:

AC-DC . . . . . AC
INPUT ATTEN . . . . . 10:1 and 100:1 switches released
TRIGGER LEVEL . . . . . fully cw

Table 3-1
TEST EQUIPMENT

Name	Minimum Use Specification	Recommended Unit*
General-Purpose Oscillator	Generates 1-kHz sine wave, adjustable 0 to 5 V.	GR 1310 Oscillator (P/N 1310-9701)
Standard-Frequency Oscillator	Generates 100 kHz or 1 MHz with an amplitude >100 mV rms into 10 kΩ. Frequency must be $\geqslant \pm 10^{-5}$ of the 100-kHz or 1-MHz signal.	GR 1115 Standard-Frequency Oscillator (P/N 1115-9801)
Patch Cord	Double-plug-to-BNC adaptor cable to connect general-purpose oscillator to counter.	GR776-A Patch Cord (P/N 0776-9701)
Patch Cord	GR874®-to-BNC adaptor cable to connect standard-frequency oscillator to counter (2 required).	GR776-B Patch Cord (P/N 0776-9702)
Tee Connector	GR874 connectors in a tee configuration for joining two cables at the standard-frequency oscillator	GR874-T Tee (P/N 0874-9910)

*or equivalent.

Table 3-2
CHARACTER INDICATION*

Measurement Push Button	Gate Time — Periods or Ratios Averaged						TIME INTERVAL
	100 μs-1	1 ms-10	10 ms-10^2	100 ms-10^3	1 s-10^4	10 s-10^5	
FREQUENCY	0.00 MHz	0.000 MHz	0.0000 MHz	0.00 kHz	0.000 kHz	0.0 Hz	
PERIOD							
0.1 μs	0.0000 ms	0.00 μs	0.000 μs	0.0000 μs	0.00 ns	0.000 ns	0.0000 ms
1 μs	0 000 ms	0.0 μs	0.00 μs	0.000 μs	0.0 ns	0.00 ns	0.000 ms
10 μs	0.00 ms	0 μs	0.0 μs	0.00 μs	0 ns	0.0 ns	0.00 ms

*There are no decimal points for RATIO or COUNT measurements.

DISPLAY . . . . . HOLD
POWER-OFF . . . . . POWER
STORAGE ON-OFF (rear panel) . . . . . OFF (Depressed)

Depress the proper measurement button and check decimal-point location and symbol for all range settings as shown in Table 3-2 (digits may be other than zero). These decimal positions apply to all counter models.

3.1.3 Frequency Mode.

Set the controls as follows:

POWER OFF . . . . . POWER
STORAGE ON-OFF . . . . . OFF
100 kHz TEST . . . . . Depressed
DISPLAY . . . . . 1 s
Range . . . . . 10 ms—10^2

Depress the FREQUENCY mode button. The counter will count the internal 100kHz TEST signal for 10 ms and then display it for 1 s. The visual display will be 000.1000 MHz (00.1000 MHz for 6-digit counter and 0.1000 MHz for 5-digit counter) ± 1 count.

3.1.4 Period Mode.

Set the controls as shown in paragraph 3.1.3. To check the three PERIOD positions, proceed as follows:

a. Depress the 0.1-μs push button. The counter will count the 10-MHz internal signal for 100 periods of the 100kHz TEST signal and display the results for 1 s. The visual register will read 0010.000 μs (010.000 μs for 6-digit counter and 10.000 μs for 5-digit counter).

b. Depress the 1-μs push button. The counter will count the internal 1-MHz signal for 100 periods of the internal 100kHz TEST signal. The visual register will display 00010.00 μs (0010.00 μs for 6-digit counter and 010.00 μs for 5-digit counter).

c. Depress the 10-μs push button. The counter will count the internal 100-kHz signal for 100 periods. The visual register will display 000010.0 μs (00010.0 μs for 6-digit counter and 0010.0 μs for 5-digit counter).

3.1.5 Count Mode.

Set the controls as shown in paragraph 3.1.3 except depress the COUNT START-STOP push button.

When the COUNT button is depressed the counter will start counting the internal 100-kHz signal and, when it is pressed again and released, the counter will stop counting and display an arbitrary number for 1 s before it is reset. If the START button is pushed before the display time is up, the counter will totalize, i.e., the new count will be added to the original count and the final answer will be the total of the two measurements.

A reset pulse is generated automatically when going from any measurement mode to the COUNT mode. This insures that the first measurement made in the COUNT mode is an accurate measurement.

3.1.6 Ratio Mode.

Set the controls as shown in paragraph 3.1.3 except set the range switch to the 100 ms—10^3 position.

Connect an external sine-wave signal (less than 10 MHz, greater than 100 mV rms) to the INPUT B connector on the rear panel and depress the RATIO push button on the front panel. The visual register will count for a time of 10^3 periods of the INPUT B signal. The 100kHz TEST signal is used instead of an external signal at INPUT A and it is the INPUT B signal divided by 100. The visual register will display 0000010 (000010 for 6-digit counter and 00010 for 5-digit counter). The measurement will be displayed for 1 s before being repeated. Under these measurement conditions, the INPUT B signal is the time base for the counter. (Before proceeding, disconnect the INPUT B signal).

Table 3-3
GATE-TIME CHECK-FREQUENCY MODE

Gate Time	Visual Display		
	7 Digits	6 Digits	5 Digits
100 μs	00000.10 MHz	0000.10 MHz	000.10 MHz
1 ms	0000.100 MHz	000.100 MHz	00.100 MHz
10 ms	000.1000 MHz	00.1000 MHz	0.1000 MHz
100 ms	00100.00 kHz	0100.00 kHz	100.00 kHz
1 s	0100.000 kHz	100.000 kHz	*00.000 kHz
10 s	100000.0 Hz	*00000.0 Hz	*0000.0 Hz

*Indicates SPILL lamp is on at left-hand end of visual register. This means that the count overflowed the register.

Table 3-4
PERIODS-AVERAGED CHECK -(1 μs)

Periods Averaged	Visual Display		
	7 Digit	6 Digit	5 Digit
1	0000.010 ms	000.010 ms	00.010 ms
10	000010.0 μs	00010.0 μs	0010.0 μs
10^2	00010.00 μs	0010.00 μs	010.00 μs
10^3	0010.000 μs	010.000 μs	10.000 μs
10^4	010000.0 ns	10000.0 ns	*0000.0 ns
10^5	10000.00 ns	*0000.00 ns	*000.00 ns

*Indicates SPILL lamp is on at left-hand end of visual register. This means that the count overflowed the register.

3.1.7 Range Switch.

Gate Time.

Recheck the counter controls and see that they are set as follows:

POWER-OFF . . . . . POWER
STORAGE ON-OFF . . . . . OFF
100kHz TEST . . . . . Depressed
FREQUENCY . . . . . Depressed
DISPLAY . . . . . 1 s

Set the range switch to the 100-μs position. The counter will count for 100-μs and display the results for 1 s in the visual registers. Table 3-3 lists the visual-register readings to be expected as the various GATE TIME settings of the range switch are checked.

Periods or Ratios Averaged.

NOTE

Be sure that the counter has stopped counting before the reading is checked.

To check these switches proceed as follows:

a. Set the controls as listed in paragraph 3.1.7 **Gate Time** except the PERIOD 1-μs push button should be depressed. The counter now counts the internal 1-MHz signal for the number of periods of the 100-kHz signal that is indicated by the setting of the range switch. Table 3-4 lists the visual-register readings for the settings of the range switch.

b. Depress the 0.1-μs push button. The visual register will read what is shown in Table 3-3, except each reading is moved 1 digit to the left. The spill lamp will come on in the 10^5 position, for the 7-digit version.

c. Depress the 10-μs pushbutton. The visual register will read what is shown in Table 3-3, except each reading is moved one digit to the right.

3.1.8 Time Interval.

A time interval can be measured with a 0.1-, 1-, or 10-μs resolution between a start and stop pulse. Set the counter controls as follows:

POWER-OFF . . . . . POWER
100kHz TEST . . . . . Released
TIME INTERVAL 0.1μs
Range Switch . . . . . TIME INTERVAL
DISPLAY . . . . . 1 s

Connect the START input on the rear panel momentarily to ground and note that the counter counts at a 10-MHz rate (the seventh digit counts at a 0.1-s rate). Connect the STOP input momentarily to ground and note that the counting stops. The display will terminate after 1 s.

Repeat this procedure with the 1-μs TIME INTERVAL button depressed and note that the counter counts at a 1-MHz rate (the seventh digit counts at a 1-s rate).

Repeat the original procedure with the 10-μs button depressed and note that the counter counts at a 100-kHz rate (the sixth digit counts at a 1-s rate).

3.1.9 Display Control.

Set the controls as shown in paragraph 3.1.3 and press the FREQUENCY mode button. Vary the DISPLAY control from 10 s to 10 ms and note that the counter displays the measurement for approximately the indicated time.

NOTE

Numerals may appear to "pile up" at the shortest DISPLAY times.

Rotate the control to its farthest ccw position (HOLD) and note that the display time is infinite.

3.1.10 Reset.

The RESET push button resets all internal circuitry to zero and holds it at zero as long as it is depressed. Leave the controls as set for paragraph 3.1.9 and hold the RESET button depressed. Note that the visual register resets to zero

and stays at zero while the button is depressed. Release the button and note that a measurement is initiated.

3.1.11 Indicator Lamps.

Count. Press the COUNT pushbutton and see that the COUNT lamp on the left-hand end of the visual register turns on, indicating that the counter is counting. When the COUNT button is again depressed and released, the lamp will go out. This indicates that the main gate is shut off, terminating the count.

Spill. To check the spill lamp, set the controls as follows:

100kHz TEST	Depressed
PERIOD 0.1 μs	Depressed
DISPLAY	1 s
Range Switch	10^5

The SPILL lamp will glow as long as the register is displaying the measurement, indicating that the most significant figure has spilled over to the left.

3.1.12 Input A.

The INPUT A circuit takes the input waveform and translates each threshold crossing into a pulse for the counter to count. The TRIGGER LEVEL control determines the setting of the threshold at which the counter triggers. It can be varied from ccw to cw over a range of ±100 mV, ±1 V, ±10 V, or ±100 V, depending on the setting of the INPUT ATTEN buttons (1:1, 10:1, 100:1, or 1000:1, respectively).

Set the controls as follows:

FREQUENCY	Depressed
DISPLAY	1 s
Range Switch	1 s
TRIGGER LEVEL	Centered
100kHz TEST	Unlatched

To check the sensitivity levels, proceed as follows:

a. Apply an external 1-kHz sine-wave signal to the INPUT A connector. Adjust the 1-kHz signal level so that a 1-kHz reading is just obtained with the TRIGGER LEVEL centered.

b. Turn the TRIGGER LEVEL control fully cw and increase the signal level until the counter begins to count.

c. Depress the 10:1 INPUT ATTEN button and notice that the counter will count only at the most sensitive spot on the TRIGGER LEVEL control (near the + and - line) with the same input signal. By inserting the 10:1 attenuator the 10:1 change introduced by setting the TRIGGER LEVEL cw has been balanced off and the counter will trigger only at a point that is 10 times more sensitive, the center of the TRIGGER LEVEL control.

d. Set the TRIGGER LEVEL control to the full cw position and increase the input signal until the counter begins to count.

e. Depress the 10:1 button again to release it and depress the 100:1 button. Notice that the counter will again count only at its most sensitive position (near the + and - line).

f. Set the TRIGGER LEVEL to its full cw position and increase the input signal level until the counter begins to count.

g. Depress the 10:1 INPUT ATTEN button so total attenuation is 1000:1 and notice that the TRIGGER LEVEL must be set to its most sensitive position to obtain a reading.

3.1.13 Trigger Level.

To check the TRIGGER LEVEL control, set the controls as follows:

STORAGE	Depressed (OFF)
TRIGGER LEVEL	cw
COUNT	Depressed

Disconnect any signal from INPUT A and momentarily depress the RESET button. Turn the TRIGGER LEVEL in a ccw direction to its stop then back to the cw end. The right-hand digit in the visual register will display a 1. Repeat the ccw-cw swing of the TRIGGER LEVEL control and note that the numbers accumulate in the registers. This indicates that the TRIGGER LEVEL control is working properly.

3.1.14 Storage.

A push-button switch is provided on the rear panel to control the storage circuits. The advantage of using the storage mode is that no flicker is observed during the count cycle and, therefore, the last measurement remains displayed in the registers until the next measurement has been completed and is ready to be displayed. The counter employes a storage register for all the counting registers as well as the spill circuit.

To check the storage operation, depress 100kHz TEST and FREQUENCY, while leaving the STORAGE button unlatched. The display will remain constant, but the COUNT light will indicate the counter is counting.

If the storage feature is not needed, depress the push button to the OFF (IN) position. This operation has been checked in the modes previous to storage.

3.1.15 External Time Base.

The internal 10-MHz oscillator can be locked to an external 1-MHz or 100-kHz frequency source with a greater than 100 mV rms amplitude into 10 kΩ. A rear-panel push button is used to select the frequency to be used.

In order for the counter to lock on the external signal, the frequency must be within $\pm 10^{-5}$ of the 1-MHz or 100-kHz signal. To check whether the external signal meets these requirements, connect the signal to the INPUT A connector on the front panel and check that it reads 1000.000 kHz ±10 Hz or 100000.0 Hz ± 1 Hz.

If a 1-MHz external lock signal is used, set the EXT TIME BASE control on the rear panel to the out position and connect the 1-MHz signal to the INPUT B connector. To check that the signal has phase locked the counter, also connect the signal to the INPUT A connector, depress the FREQUENCY button and set the range switch to 10 s. The reading in the visual register should be 000000.0 with the SPILL lamp lit. Remove the INPUT B connection and the visual register should indicate the reading observed when the external frequency was originally measured at INPUT A. The only case that will not produce a change is if the external and internal oscillators are within $\pm 1 \times 10^{-7}$ of each other.

3.2 INPUT CONTROLS.

3.2.1 Characteristics.

Table 3-5 lists the input characteristics of the INPUT A and INPUT B channels.

3.2.2. Input A.

There are four front-panel controls that affect the INPUT A signal. Two of these controls are the INPUT ATTEN push buttons, the third is the AC-DC switch, and the fourth is the TRIGGER LEVEL control.

The two attenuator buttons are used to set the hysteresis of the counter (e.g., set the minimum sensitivity of the instrument). The best hysteresis value is one that is much larger than the largest noise signal expected at the input, but where the signal is adequately larger than the hysteresis to guarantee steady triggering. Under general operating conditions, the maximum attenuation available should be in use and then decreased until a steady reading is displayed in the visual register. A counter should rarely be used without any attenuation, except for very small input signals, since noise with a typical 5-mV rms level can trigger the counter.

The AC-DC switch determines the coupling between the INPUT A connector and the A Input circuit. Maximum and minimum values of frequency and amplitude are given in Table 3-5. As a general rule the counter will be operated in the AC position.

The TRIGGER LEVEL control is used to move the triggering point to a position on the waveform where the slope is steep and therefore often void of noise pulses. For the average waveform, the TRIGGER LEVEL should be set to the + and - line (zero crossing) since the steepest slope occurs at this point. When the input signal is a positive- or negative-going pulse, the trigger level must be moved away from the zero level, because damped oscillations often occur at the base line (zero level). The INPUT ATTEN push buttons control the range of the TRIGGER LEVEL control. The various ranges are listed as part of Table 3-5.

3.2.3 Input B.

The INPUT B connector on the rear panel is used only for RATIO measurements and as an input for the external time base input to lock the internal crystal oscillator. The trigger level is fixed for INPUT B at a slightly positive level and the hysteresis is fixed at less than 100 mV rms (1 V at frequencies less than 400 Hz).

3.2.4 General Settings.

The input controls can be set as follows for most measurements:

a. Connect the input signal to the INPUT A connector on the front panel. If a probe is used, insert the probe between the unknown signal and the INPUT A connector.

b. Set the AC-DC switch to the AC position. This switch can be set to the DC position for a very low frequency signal or when used with pulse inputs when the dc values are known.

c. Set the INPUT ATTEN push buttons for 100:1 or 10:1. The largest possible setting should be used, if the signal is adequate. When a large attenuation is used, the chance of erratic readings due to noise pulses is reduced.

d. Center the TRIGGER LEVEL control. If an ac signal is noisy at the zero crossing, rotate the TRIGGER LEVEL control in the positive or negative direction to obtain a stable reading. When the input signal contains a dc component, set the TRIGGER LEVEL cw or ccw to obtain a measurement (paragraph 3.2.5).

3.2.5 Special Settings.

Table 3-6 shows some examples of input signals that require special adjustments of the input controls. These settings are variations of the general settings given in paragraph 3.2.4. The voltages shown are at the input to the triggering circuits; after attenuation by the probe (if used) and the INPUT ATTEN switches.

Table 3-5
INPUT CHARACTERISTICS*

Input	Attenuator	Without Probe		With Probe		Trigger Level Range	
		Minimum	Maximum	Minimum	Maximum**	Without Probe	With Probe
A	1:1	10 mV rms, 30 mV pk-pk to 20 MHz. 20 mV rms, 60 mV pk-pk to 32 MHz.	400 V dc or ac pk	100 mV rms, 300 mV pk-pk to 20 MHz. 200 mV rms, 600 mV pk-pk to 32 MHz.	600 V dc or ac pk-pk	±100 mV	±1 V
	10:1	100 mV rms, 300 mV pk-pk to 20 MHz, 200 mV rms, 600 mV pk-pk to 32 MHz.	400 V dc or ac pk.	1 V rms, 3 V pk-pk to 20 MHz, 2 V rms, 6 V pk-pk to 32 MHz.	600 V dc or ac pk-pk	±1 V	±10 V
	100:1	1 V rms, 3 V pk-pk to 20 MHz. 2 V rms, 6 V pk-pk to 32 MHz.	400 V dc or ac pk.	10 V rms, 30 V pk-pk to 20 MHz. 20 V rms, 60 V pk-pk to 32 MHz.	600 V dc or ac pk-pk	±10 V	±100 V
	1000:1	10 V rms, 3 V pk-pk to 20 MHz. 20 V rms, 60 V pk-pk to 32 MHz.	400 V dc or ac pk	100 V rms, 300 V pk-pk to 20 MHz. 200 V rms, 600 V pk-pk to 32 MHz.	600 V dc or ac pk-pk	±100 V	±1000 V (Limited by probe rating.)
B	None	100 mV rms, 300 mV pk-pk above 400 Hz. 1 V rms, 3 V pk-pk below 400 Hz.	400 V dc, 80 V ac pk.	No Probe	No Probe	Fixed Position Trigger Level	No Probe

*Frequency, INPUT A: dc coupled, dc to 32 MHz; ac coupled, 3 Hz to 32 MHz.
Frequency, INPUT B: ac coupled only, 50 Hz to 10 MHz.
Impedance, INPUT A: 1 MΩ shunted with 27 pF, without probe; 10 MΩ shunted with 7 pF, with probe.
Impedance, INPUT B: 10 kΩ shunted with 20 pF, without probe.
**Less over 4.5 MHz: 500 V at 5.5 MHz, 400 V at 7 MHz, 300 V at 9 MHz, 200 V at 14 MHz, and 100 V at 25 MHz.

3-6 OPERATION

Table 3-6

SPECIAL INPUT-SIGNAL CONDITIONS

Problem	Solution
Insufficient signal. Signal level is less than hysteresis; no triggering occurs. 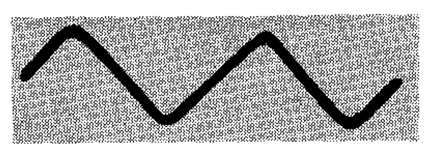	Signal level increased or attenuation decreased (INPUT ATTEN set from 1000 or 100 or 10 to 1); proper triggering occurs. 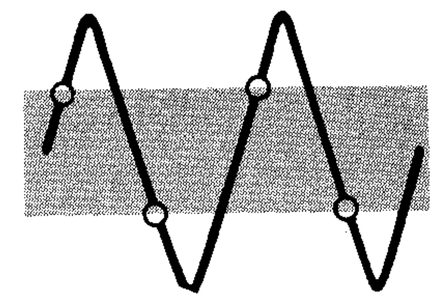
Dc component. Signal contains positive dc component; with TRIGGER LEVEL control centered, no trigger occurs. 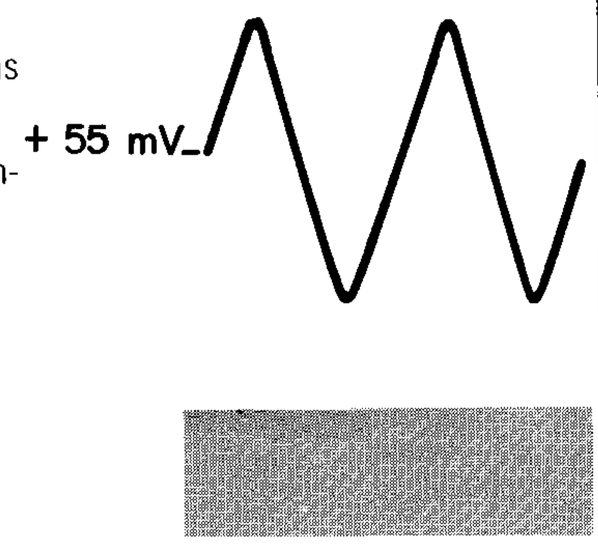	Trigger level set to same value as dc component of signal (TRIGGER LEVEL control turned cw; if dc component had been negative, TRIGGER LEVEL control would have been turned ccw); proper triggering occurs. 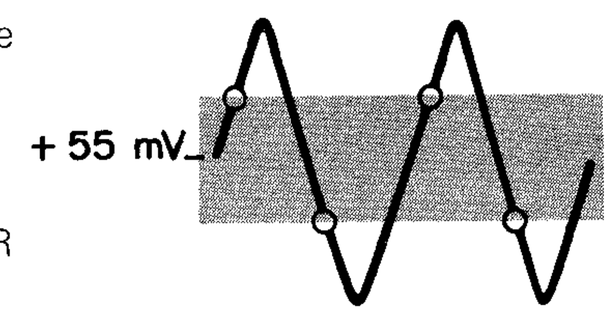
Excessive dc component, low duty ratio. Signal contains a large positive dc component; no triggering occurs. 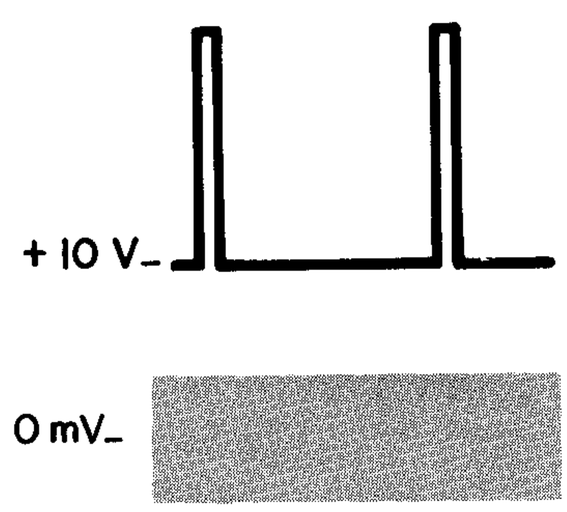	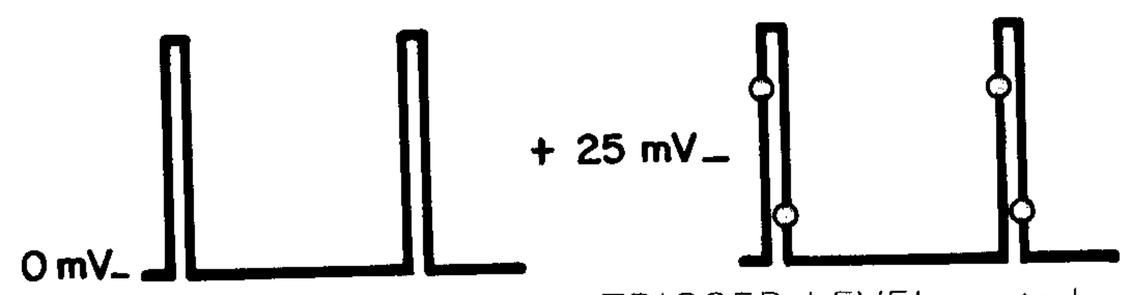 Ac coupling used to eliminate dc component; low duty ratio prevents triggering. TRIGGER LEVEL control turned cw; if pulses had been negative, TRIGGER LEVEL control would have been turned ccw; proper triggering occurs.
Noise. Noise peaks exceed hysteresis; erratic and erroneous trigger occurs. 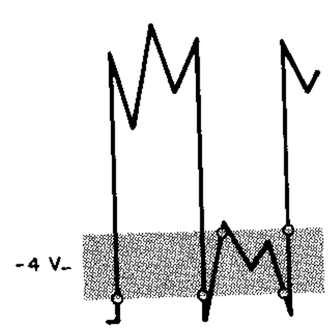	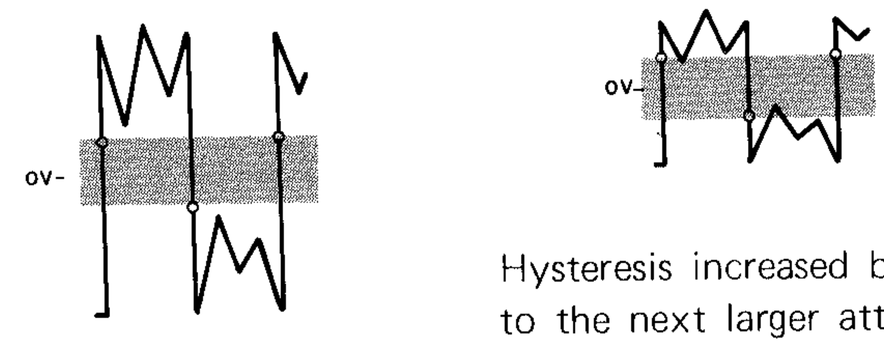 Trigger level set out of noise range; proper triggering occurs. Hysteresis increased by going to the next larger attenuation or signal level decreased so that noise peaks do not exceed hysteresis; proper triggering occurs.
Am signal. Amplitude modulation reduces signal below hysteresis; counts are missed. 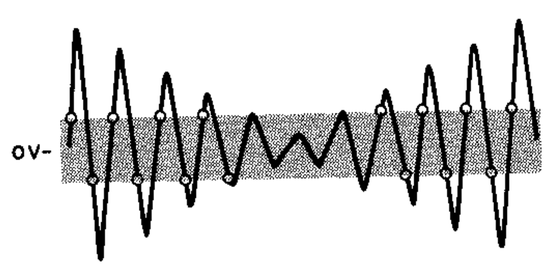	Signal level increased or attenuation decreased; proper triggering occurs. 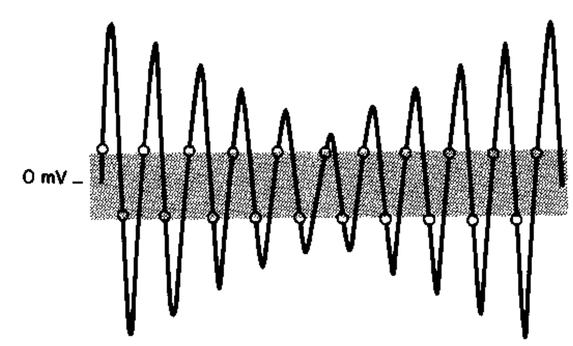

3.3 FREQUENCY.

3.3.1 General.

The 1192 Counter will measure frequencies up to 32 MHz with a resolution of 0.1 Hz (Figure 3-1). The frequency mode is selected by depressing the FREQUENCY push button on the front panel of the counter. Counting

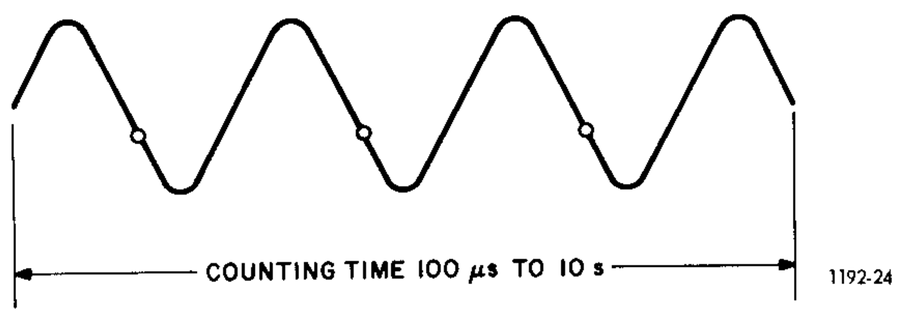

Figure 3-1 Sine-wave signal for frequency measurement.

times are set by the GATE TIME positions on the range switch. This switch also automatically selects the decimal-point position and the measurement units. The display time is set by the DISPLAY control.

The resolution of a measurement is often an important measurement consideration. The short gate times available in the 1192 should be used for low-resolution or high-frequency measurements and the longer gate times for high resolution or low-frequency measurements. A measurement made with a 5- or 6-digit counter can be made to have the same resolution as a 7-digit counter by making the measurement twice, first measuring the most significant digits and then the least significant digits. Table 3-7 shows the resolution available from the 1192 Counter for the GATE TIME positions.

3.3.2 Settings.

To make a frequency measurement, proceed as follows:

a. Set the POWER - OFF switch to POWER.

b. Depress the front-panel FREQUENCY push button.

c. Set the range switch to the desired GATE TIME position.

d. Set the DISPLAY control to the desired position.

e. Connect the input signal to the INPUT A connector.

f. Set the INPUT ATTEN push buttons, the AC-DC switch, and the TRIGGER LEVEL control to the proper positions, as outlined in paragraph 3.2.2.

g. Read the measured value of the input signal from the visual register.

3.4 PERIOD.

3.4.1 General.

If the frequency of the input signal is low enough that adequate resolution cannot be obtained with the gate times available, or the measurement time is longer than desired for a frequency measurement, use the period mode. There are three PERIOD-mode push buttons; 0.1μs, 1 μs, and 10μs. The 0.1-μs PERIOD button is depressed for maximum resolution measurements and for period measurements of high-frequency signals. When this position is used, the 10-MHz internal signal is counted and the length of the count gate is determined by the INPUT A signal.

The 1-μs PERIOD position counts the 1-MHz internal signal and is used for medium resolution and low frequency measurements.

The 10-μs PERIOD position counts the 100-kHz internal signal and is used for low resolution and very low frequency measurements. This position should also be used to prevent spillover in a 5- or 6-digit counter when the signal is averaged over several periods.

The range switch PERIODS AND RATIOS AVERAGED positions determine the number of periods for which the gate is open (Figure 3-2). The longer the gate remains open the less the noise on the input signal will affect the final

Table 3-7
FREQUENCY MEASUREMENT

Function	Gate Time					
	100 μs	1 ms	10 ms	100 ms	1 s	10 s
RESOLUTION	10 kHz	1 kHz	100 Hz	10 Hz	1 Hz	0.1 Hz
SPILL (maximum before overflow)						
5-DIGIT COUNTER	No Spill	No Spill	10 MHz	1 MHz	100 kHz	10 kHz
6-DIGIT COUNTER	No Spill	No Spill	No Spill	10 MHz	1 MHz	100 kHz
7-DIGIT COUNTER	No Spill	No Spill	No Spill	No Spill	10 MHz	1 MHz
	± (1 count + time-base accuracy)					

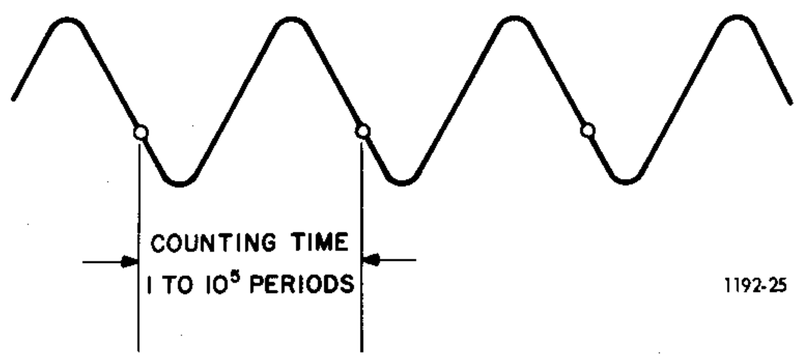

Figure 3-2 Sine-wave signal for period measurement.

measurement, since the noise gets reduced through the averaging process. No matter how many periods are averaged, the final answer displayed in the visual register will be the time for one period, including the decimal point and measurement units. Table 3-8 shows the measurement resolution possible and also the maximum periods that can be measured with 5-, 6-, and 7-digit counter models, before the most significant digit is lost by register overflow.

3.4.2 Settings.

To make a period measurement, proceed as follows:

a. Set the POWER-OFF switch to POWER.

b. Depress front-panel PERIOD AND TIME INTERVAL push button desired.

c. Set the range switch to the highest number of PERIODS OR RATIOS AVERAGED that will give a reasonable measurement time and not produce any spillover.

d. Set the DISPLAY control to the desired position.

e. Connect the input signal to the INPUT A connector.

f. Set the INPUT ATTEN push buttons, the AC-DC switch, and the TRIGGER LEVEL control to the proper positions as outlined in paragraph 3.2.2.

g. Read the measured value of the input-signal period in the visual register. The reading displayed in the visual register is the value of one period, regardless of how many periods were averaged.

3.5 RATIO.

3.5.1 General

A ratio measurement is made between two input signals, one connected to the front-panel INPUT A connector and the other connected to the rear-panel INPUT B connector. The pulses that are counted are derived from the INPUT A signal and the counting time is established by the period of the INPUT B signal. The range switch selects the number of ratios to be averaged from 1 to 10^5 (Figure 3-3).

The lower frequency signal is normally applied to the INPUT B connector and the higher to INPUT A. The

Table 3-8
PERIOD MEASUREMENT

Function	Periods Averaged					
	1	10	10^2	10^3	10^4	10^5
RESOLUTION* ±(1 count + trigger error + time-base accuracy)						
0.1μs	0.1μs	10ns	1ns	0.1ns	10ps	1ps
1μs	1μs	0.1μs	10ns	1ns	0.1ns	10ps
10μs	10μs	1μs	0.1μs	10ns	1ns	0.1ns
7-DIGIT SPILL**,†						
0.1μs	1s	0.1s	10ms	1ms	0.1ms	10μs
1μs	10s	1s	0.1s	10ms	1ms	0.1ms
10μs	100s	10s	1s	0.1s	10ms	1ms
6-DIGIT SPILL**,†						
0.1μs	0.1s	10ms	1ms	0.1ms	10μs	1μs
1μs	1s	0.1s	10ms	1ms	0.1ms	10μs
10μs	10s	1s	0.1s	10ms	1ms	0.1ms
5-DIGIT SPILL**,†						
0.1μs	10ms	1ms	0.1ms	10μs	1μs	0.1μs
1μs	0.1s	10ms	1ms	0.1ms	10μs	1μs
10μs	1s	0.1s	10ms	1ms	0.1ms	10μs

*Resolution averaged for one period.
**Values indicate time for 1 period at which spill will occur. For example, if a seven-digit counter counts for one period with the 0.1-μs time base, the visual register will spill over (SPILL) if the input signal has a period greater than 1 s.
†If the most significant figure of a period is known, the period measurement can be extended by a factor of ten if the known most significant figure is allowed to spill over. If two figures are known, a factor of one hundred is possible, etc.

Table 3-9
RATIO MEASUREMENT

Function	Ratios Averaged 1	10	10^2	10^3	10^4	10^5
RESOLUTION	Determined by the input A signal.					
ACCURACY	±(1 input A count + input B trigger error)					
MAXIMUM RATIO WITHOUT SPILL						
7-DIGIT COUNTER	10^7:1	10^6:1	10^5:1	10^4:1	10^3:1	10^2:1
6-DIGIT COUNTER	10^6:1	10^5:1	10^4:1	10^3:1	10^2:1	10:1
5-DIGIT COUNTER	10^5:1	10^4:1	10^3:1	10^2:1	10:1	1:1

reading of the visual register is the ratio A/B times the number of ratios averaged.

The resolution of a RATIO measurement will increase as the number of ratios averaged is increased, however, remember to divide the answer read in the visual register by the factor of ten that the range switch is set to, in order to obtain the correct ratio between the signals.

If the lower signal is less than 50 Hz, the signals can be interchanged and, by use of the range switch, a ratio reading can be obtained. For example, if a 30-Hz signal is connected to INPUT A and a 1000-Hz signal is connected to INPUT B, the A/B ratio would be 0.03. Since there are no decimal points displayed in the RATIO mode, the range switch must be moved to the 10^2 position to obtain a reading of 3 in the visual register. Therefore, the ratio of the signals would be 3 divided by 10^2 or 0.03, as stated before.

3.5.2 Settings.

To make a RATIO measurement, proceed as follows:

a. Set the POWER-OFF switch to POWER.

b. Depress the front-panel RATIO A/B push button.

c. Set the range switch to the number of ratios averaged desired (Table 3-9).

d. Set the DISPLAY control to the desired position.

e. Connect signal A to the INPUT A connector on the front panel and signal B to the rear-panel INPUT B connector.

f. Set the INPUT ATTEN push buttons, the AC-DC switch, and the TRIGGER LEVEL control to the proper positions as outlined in paragraph 3.2.2.

g. Read the ratio between the two signals from the visual register. Remember that if more than one ratio is averaged the reading in the visual register must be divided by the number of ratios averaged to obtain the correct ratio.

3.6 COUNT.

3.6.1 General.

Signals fed into the INPUT A connector can be counted up to 32 x 10^6 events/second for an arbitrary length of time. This time period can be set manually by the front-panel COUNT push button, remotely by applying start and stop pulses, or remotely by a gate.

In the general case, in which an event is counted over one interval only, the DISPLAY control functions in its usual manner, i.e., the visual register will reset to zero after the display time has elapsed. However, if it is desired to totalize the count, i.e., add one interval to the next, the DISPLAY control should be set to the HOLD position. The effect of a totalized count will also occur if the DISPLAY control is set to a longer time than the interval allowed before a second measurement is initiated.

3.6.2 Manual Settings.

To make a count measurement using the manual COUNT push button, proceed as follows:

a. Set the POWER-OFF switch to POWER.

b. Set the INPUT ATTEN push buttons, the AC-DC switch, and the TRIGGER LEVEL control to the proper positions as outlined in paragraph 3.2.2.

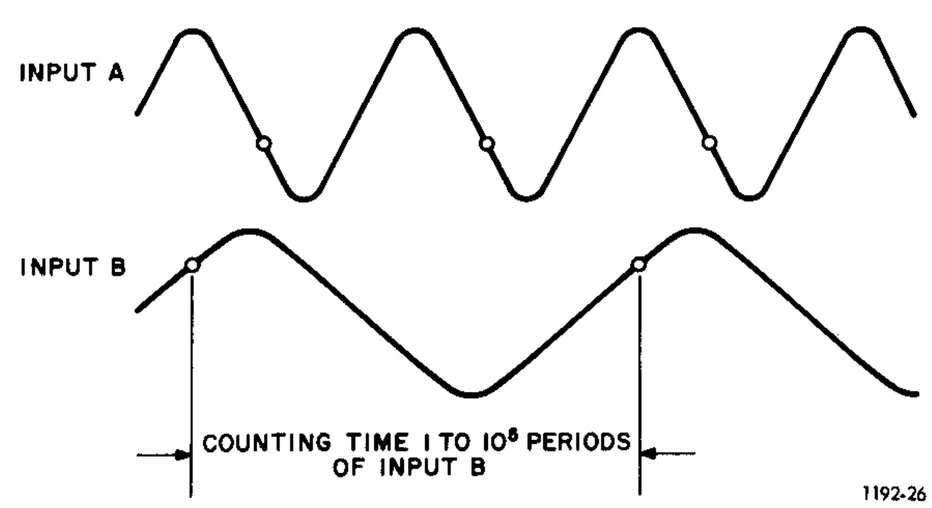

Figure 3-3 Input signals for a ratio measurement.

c. Connect the input signal to INPUT A.

d. Set the DISPLAY control for the display time desired. If totalization is desired, set the DISPLAY control to HOLD.

e. Depress the COUNT push button and the counter will start counting the signal connected to INPUT A. If the counter was previously used in any other measurement mode, a reset pulse will be generated when the COUNT button is depressed, so that the count will start from zero.

f. To terminate the count, depress the COUNT button again and it will release.

NOTE

When the COUNT button is depressed, no other measurement-mode button will stay depressed. Therefore, before going to any other measurement mode, release the COUNT button and then depress the desired measurement-mode button.

3.6.3 Stop and Start Settings.

To make a count measurement using the START and STOP connectors on the rear panel, proceed as follows:

a. Set the POWER-OFF switch to POWER.

b. Set the INPUT ATTEN push buttons, the AC-DC switch, and the TRIGGER LEVEL control to the proper positions as outlined in paragraph 3.2.2.

c. Depress the RATIO push button.

d. Connect the input signal to the INPUT A connector. Do not connect any signal to the INPUT B connector.

e. Connect a signal to the START connector on the rear of the counter. Refer to the specifications page for the signal values. Once this signal is applied, the counter will start counting.

f. Connect a signal to the STOP connector on the rear of the counter. Refer to the specifications page for the signal values. Once this signal is applied to the counter the counter will stop counting, assuming that the start input has been terminated.

g. Set the DISPLAY control for the display time desired. If totalization is desired, set the DISPLAY control to HOLD; also, if the display time is longer than the intervals between counts, the counter will totalize.

NOTE

If the counter is used in the storage mode, the width of the stop pulse must be less than the display time, otherwise the counter will operate as in the non-storage mode.

3.6.4 Remote Gate Settings.

To make a count measurement using a remote gate as a control, proceed as follows:

a. Set the POWER-OFF switch to POWER.

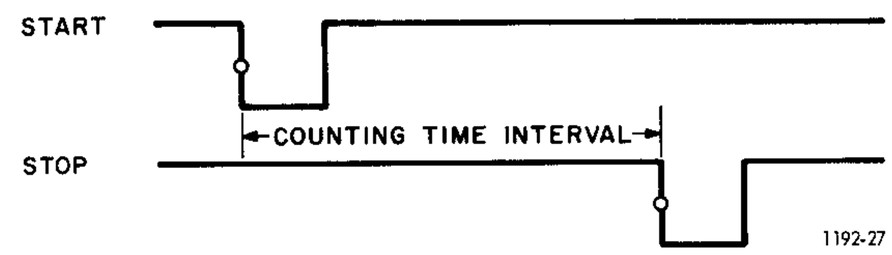

Figure 3-4 Time-interval measurement start and stop pulses.

Figure 3-5 Pulse-duration measurement triggering points.

b. Set the INPUT ATTEN push buttons, the AC-DC switch, and the TRIGGER LEVEL control to the proper positions as outlined in paragraph 3.2.2.

c. Depress the RATIO push button.

d. Connect the input signal to the INPUT A connector. Do not connect any signal to the INPUT B connector.

e. Depress the STORAGE push button to its non-storage position on the rear of the counter.

f. Connect the STOP input on the rear panel to ground.

g. Connect the remote gate to the START input on the rear panel. Refer to the specifications page for signal levels. As long as the remote gate is in its low state, the counter is counting the signal at INPUT A. When the remote gate goes to its high state, the counter will stop and display the measurement.

h. Set the DISPLAY control for the display time desired. If totalization is desired, set the DISPLAY control to HOLD. Also, if the display time is longer than the intervals between counts, the counter will totalize.

3.7 TIME INTERVAL.

3.7.1 General.

The time interval between two signals, or the duration of a signal, can be measured in the TIME-INTERVAL mode down to a resolution of 100 ns. Between the start and stop

Table 3-10

TIME-INTERVAL MEASUREMENT*

Function	Time Base		
	0.1μs	1μs	10μs
MAXIMUM INTERVAL BEFORE SPILL			
7-DIGIT COUNTER	1s	10s	100s
6-DIGIT COUNTER	0.1s	1s	10s
5-DIGIT COUNTER	0.01s	0.1s	1s

*The resolution for each counter is the value of the timebase (0.1 μs, 1μs, or 10μs) ±(1 count + trigger error + timebase accuracy).

pulses, or within the duration of the signal being measured, the counter counts its internal clock (Figures 3-4 and 3-5). The internal clock is selected by the front-panel TIME INTERVAL pushbuttons. The 0.1-μs position counts the 10-MHz signal, the 1-μs position counts the 1-MHz signal, and the 10-μs position counts the 100-kHz signal. Table 3-10 states the resolution and spill time for each counter.

3.7.2 Start and Stop Pulse Settings.

To make a time-interval measurement between two pulses, proceed as follows:

a. Set the POWER-OFF switch to POWER.

b. Depress the PERIOD OR TIME INTERVAL push button desired. Use the 0.1-μs button for maximum resolution and short intervals, the 1-μs button for medium resolution and longer intervals, and the 10-μs button for the least resolution and longest intervals.

c. Set the range switch to TIME INTERVAL.

d. Connect the start pulse to the rear-panel START connector.

e. Connect the stop pulse to the rear-panel STOP connector. Refer to paragraph 3.12. for signal levels.

NOTE

The start pulse must be terminated before the stop pulse is applied. If storage operation is used, the stop pulse must be less than the display time (otherwise the storage mode operates like the non-storage mode).

f. Set the DISPLAY control to the desired position. If the storage mode is to be used, set the DISPLAY control for a longer time than the duration of the stop pulse. If the DISPLAY control is set to HOLD, or to a longer display time than the time difference between the stop pulse terminating one measurement and the start pulse initiating the next measurement, the counter will totalize all the time-interval measurements.

3.7.3 Pulse-Duration Settings.

To measure the duration of a pulse, proceed as follows:

a. Set the POWER-OFF switch to POWER.

b. Depress the PERIOR OR TIME INTERVAL button desired (paragraph 3.7.2, step b).

c. Set the range switch to TIME INTERVAL.

d. Connect the rear-panel STOP connector to ground.

e. Connect the pulse whose time duration is to be measured to the rear-panel START connector.

f. Set the rear-panel STORAGE button to the OFF position.

g. Set the DISPLAY control for the desired length of display time.

NOTE

If the DISPLAY control is set to HOLD or to a longer display time than the time between the end of one pulse and the beginning of the next, the counter will totalize all the time durations measured.

3.8 RESET CONTROL.

The RESET push button sets all the internal circuits in the counter to zero and holds them in their reset position until the button is released. This button is also used to initiate new measurements, when the display time is set for infinity (HOLD position).

3.9 DISPLAY CONTROL.

The DISPLAY control determines the time the counter displays a measurement before the next measurement is initiated. The display time can be continuously adjusted from 10 ms to greater than 10 s (typically 12 s).

The counter also has an infinite-display-time position called HOLD. In this position the counter displays the last measurement indefinitely or until the RESET button is depressed.

A storage register is employed in the counter that stores and displays the results of one measurement while another measurement is being taken. The total display time in this mode is the sum of the display time as set by the DISPLAY control and the gate length, or the number of periods, as set by the range switch.

3.10 EXTERNAL TIME BASE.

The 1192 Counter can be phase locked to an external signal. Paragraph 3.1.15 outlines the procedure for obtaining a lock to an external signal.

3.11 100kHz TEST SIGNAL.

The 100kHz TEST signal is used to check that the internal logic circuitry is operating properly. In the FREQUENCY, PERIOD and COUNT modes, the 100-kHz signal is used instead of the INPUT A signal. In the RATIO mode, the test signal is the INPUT B signal divided by 100. This signal was used as the primary test signal in the checks presented in paragraph 3.1. The signal can be measured at any time by setting the controls as if making a measurement of a signal at the INPUT A connector. For example, to make a frequency measurement of the signal, proceed as follows:

a. Set the POWER-OFF switch to POWER.

b. Depress the FREQUENCY and 100kHz TEST push buttons.

c. Set the DISPLAY control to the desired length of time.

d. Set the range switch to the GATE TIME desired.

e. Read the 100-kHz value from the visual register. The SPILL lamp will light if the GATE TIME is set to 1 s or 10 s for a 5-digit counter and if set to 10 s for a 6-digit counter.

3.12 ACCURACY.

3.12.1 Error Sources.

Accuracy is determined by up to three factors, depending upon the measuring mode:

Measuring Mode	Error Sources
Frequency	±(1 count + time-base accuracy)
Period	±(1 count + trigger error of A input + time-base accuracy)
Time Interval	±(1 count + start- and stop-input trigger error, + time-base accuracy)
Ratio	±(1 count + trigger error of B input)
Manual Count	±(1 count + error in manual operation of pushbutton)
Remote Count	±(1 count + start-input trigger error)

3.12.2 The ±1 Count Uncertainty.

In all digital counters, frequency is measured in terms of pulses representing the signal zero crossings within an accurately established time interval called the gate. What should be measured, to define the frequency, is the precise number of time intervals representative of the unknown frequency that occur within the gate.

For expositional purposes, consider the pulse representing the input signal as infinitely short and the gate as infinitely fast. If the gate length varies very slightly in time, like Δt in Figure 3-6, and if both pulses at the ends of the gate are counted, the count is 11, even if the actual total number of intervals is 10. If all the pulses within the gate are counted except the one at the beginning or at the end, the count would be 10 and would correspond to the correct number of time intervals counted. If all pulses within the gate are counted except those at the beginning and at the end, the count would be 9, even if the number of intervals is 10. In these three instances, the count could be 11, 10 or 9, therefore, the correct reading is 10±1 count.

For frequency, the resolution is greatest, and the error caused by the ±1 count ambiguity is smallest, when the largest number of counts get accumulated in the register, so that the percentage accuracy caused by the ±1 count error is:

$$\epsilon_F = \frac{1 \times 100}{F \times G} \%$$

where G = gate length in seconds and
F = the frequency of the measured signal in hertz.

For period and ratio measurements, where the input signal determines the length of the gate, the highest resolution and the smallest count error coincide with the largest number of counts accumulated during one measurement. This is the case when the input signal is averaged over many periods or ratios and the internal frequency is highest. The ±1 count error is:

$$\epsilon_P = \frac{1 \times 100}{n \times P \times F} \%$$

where n = number of periods averaged,
P = the time in seconds of one period of the input signal,
F = the internal frequency in hertz; it is either 10 MHz (0.1 μs), 1 MHz (1 μs), or 100 kHz (10 μs).

For time interval, the best resolution and smallest ±1 count error is obtained by counting the highest internal frequency

$$\pm \text{ error } \% = \frac{1 \times 100}{T \times F}$$

where T = the time of one time interval in seconds and
F = the internal frequency in hertz.

Figure 3-7 shows the resolution and the accuracy in percent for both frequency and period modes. It also shows the frequency at which the register overflows and the spill lamp turns on. To obtain maximum resolution of a high-frequency signal, two measurements can be carried out by first measuring the most-significant digits on a short gate and then obtaining the maximum resolution on a very long gate.

To use Figure 3-7, enter the chart at the frequency of the input signal on the horizontal axis, go straight up to the first intersection of the diagonal. From that intersection find resolution and accuracy on vertical axes.

For example, in the FREQUENCY mode, for an input frequency of 10^6 Hz (on the horizontal axis), go vertically

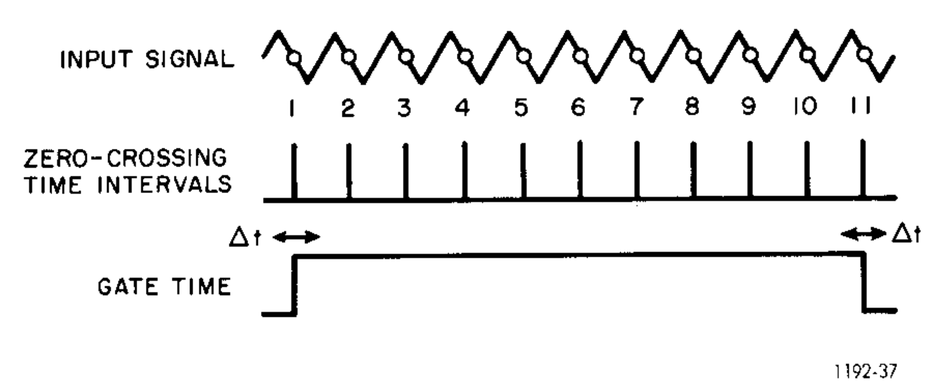

Figure 3-6. Variations possible in coincidence of zero crossings and gate lines.

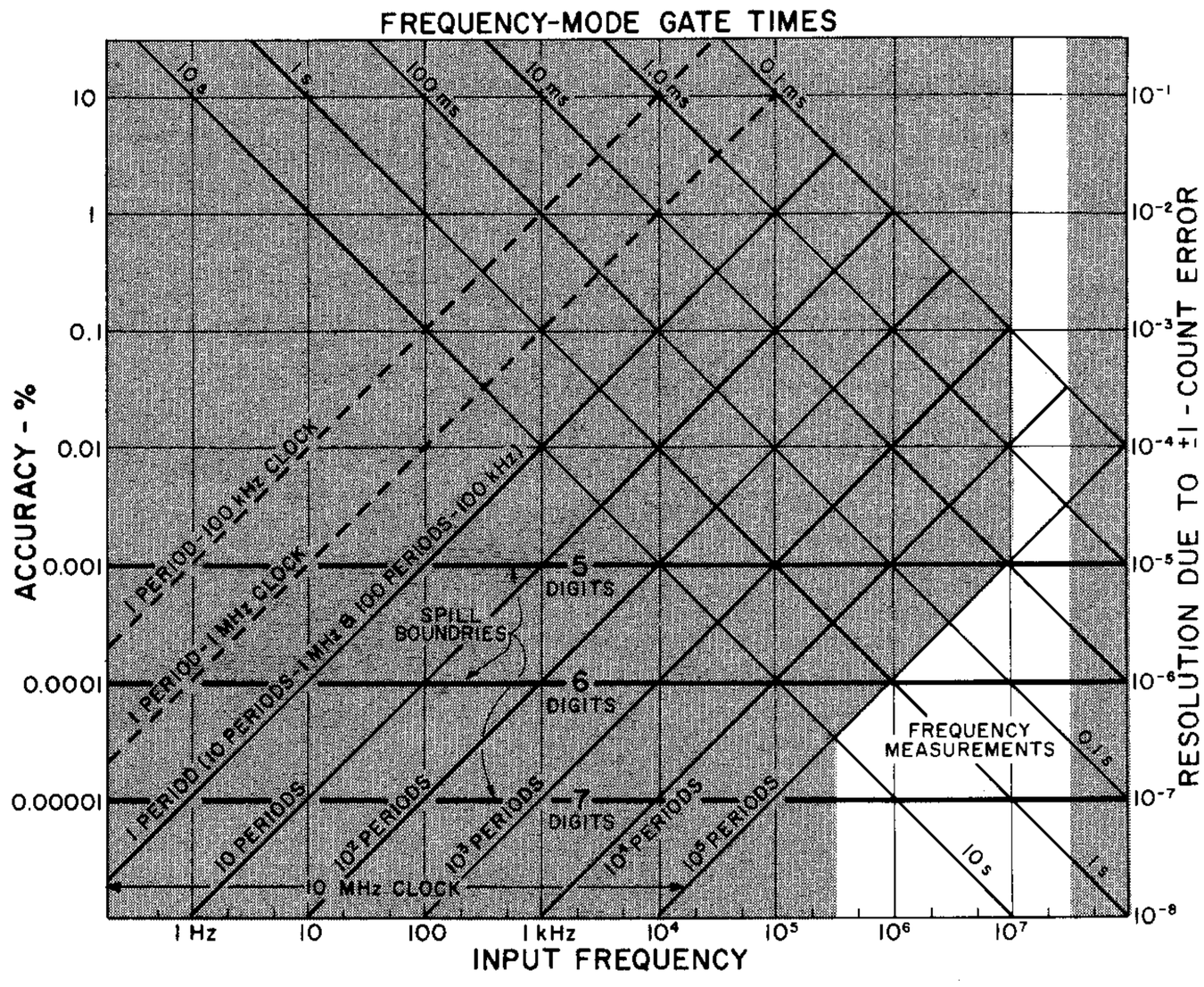

Figure 3-7. A summary of the GR 1192 resolution and display characteristics in its PERIOD and FREQUENCY modes. Within the white area resolution is highest in the FREQUENCY mode. The 1-ms GATE TIME prevents spill-over at the highest counting frequency; for period measurements, the 100-kHz counter clock permits up to 1-s periods to be measured without spill-over in the 5-digit counter, while the 10^5 -PERIODS control permits parts-per-million resolution at an input frequency of 1 MHz.

up to first diagonal intersection, at 10-s gate-time, to find the resolution to be 1×10^{-7} or .00001% accuracy. At the next intersection, 1 s gate-time, the resolution is 1×10^{-6} or .0001% accuracy. The same resolution and accuracy can be obtained in the PERIOD mode, using the opposite diagonal and measuring 10-MHz (0.1-μs) internal signal for 10^5 periods.

3.12.3 Trigger Errors Of Inputs A and B.

The accuracy of a period or ratio measurement is affected by trigger error. This is the time uncertainty of the triggering point of the counter input circuits. This uncertainty is caused by noise on the input signal or variation of the triggering level because of drift and noise in the counter. (See Figure 3-8).

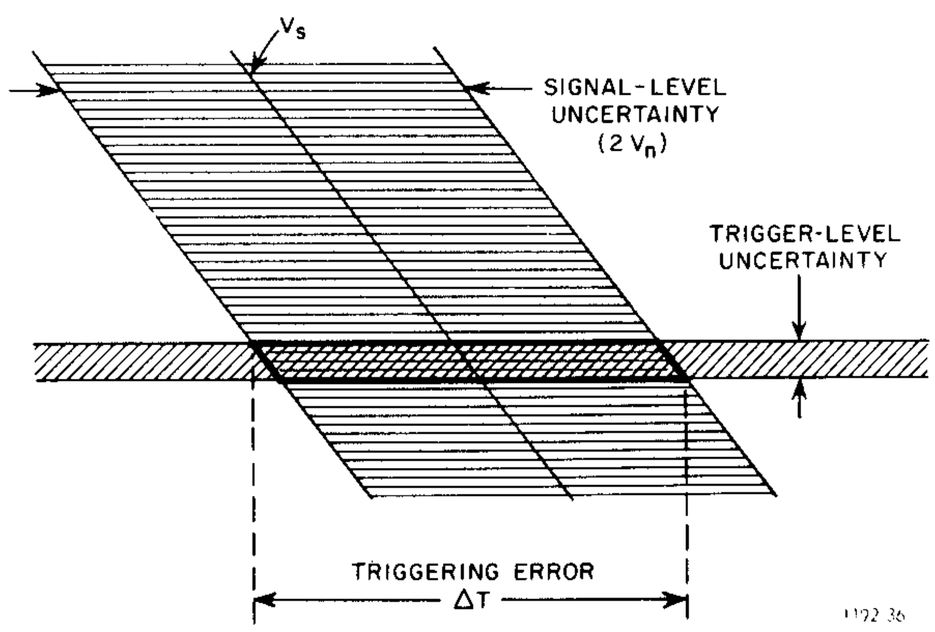

Figure 3-8. The measurement uncertainty region for a digital counter.

The error in seconds can be expressed as

$$\text{triggering error} = \Delta T = \frac{2\,V_n}{S}$$

where

S = the slope of the input signal at the triggering point in volts/second and

V_n = peak value of noise voltage.

Or, for a sine-wave input with triggering at the crossing of the zero line

$$\text{error in period measurement} = \pm \frac{V_n}{\pi \cdot V_s \cdot n}$$

where

V_n = peak value of noise voltage,

V_s = peak value of signal voltage and

n = number of periods counted.

The larger the signal-to-noise ratio and the more periods counted the more accurate the reading is. Table 3-11 shows the possible time uncertainty of the triggering point with respect to the time for the period or ratio measurement versus the signal-to-noise ratio. For extremely large signal-to-noise ratios, the counter's internal input noise starts to become important.

Table 3-11
ERRORS IN PERIOD OR RATIO MEASUREMENT

Signal-To-Noise Ratio	PERIODS OR RATIOS AVERAGED SETTING 1	10	10^2	10^3	10^4	10^5
20 dB (10:1)	$3.18 \bullet 10^{-2}$	$3.18 \bullet 10^{-3}$	$3.18 \bullet 10^{-4}$	$3.18 \bullet 10^{-5}$	$3.18 \bullet 10^{-6}$	$3.18 \bullet 10^{-7}$
40 dB (100:1)	$3.18 \bullet 10^{-3}$	$3.18 \bullet 10^{-4}$	$3.18 \bullet 10^{-5}$	$3.18 \bullet 10^{-6}$	$3.18 \bullet 10^{-7}$	$3.18 \bullet 10^{-8}$
60 dB (1000:1)	$3.18 \bullet 10^{-4}$	$3.18 \bullet 10^{-5}$	$3.18 \bullet 10^{-6}$	$3.18 \bullet 10^{-7}$	$3.18 \bullet 10^{-8}$	$3.18 \bullet 10^{-9}$
80 dB (10,000:1)	$3.18 \bullet 10^{-5}$	$3.18 \bullet 10^{-6}$	$3.18 \bullet 10^{-7}$	$3.18 \bullet 10^{-8}$	$3.18 \bullet 10^{-9}$	$3.18 \bullet 10^{-10}$

Note: Applies only to sine-wave inputs.

For A input, the counter's internal noise is typically 75 μV pk, or, so that the ΔT = triggering error in μs can be expressed as

$$\Delta T = \frac{.00015}{S}$$

where S = slope V/μs.

For input B the internal noise is typically 660 μV pk and the triggering error

$$\Delta T = \frac{.00132}{S}$$

where S = slope V/μs

The input noise at the start and stop input does not have any appreciable effect on the measurement, as those signals have fast front edges used to trigger the input.

3.12.4 Time-Base Accuracy.

The accuracy of frequency, period, and time-interval measurements is affected by time-base accuracy, which is dependent upon the stability of the internal crystal oscillator. The oscillator frequency drifts with ambient temperature, line voltage variation, and aging. Details are given in para. 4.3.4.

3.13 START AND STOP INPUT

3.13.1 Operating Levels

The input is energized by a zero level, or contact-closure-to-ground, and de-energized by a one level, or open input. The zero level must be $\leqslant$ +0.3 V and capable of sinking an output current of 6 mA. The one level must be $\geqslant$ +2.0 V, but no special current capability is necessary as an internal pull-up resistor (to +5 V) is provided. The start input must be terminated before the stop input is supplied, otherwise the start input acts as both start and stop pulse.

3.13.2 Voltage Rating

Dc Levels. The input is protected by limiting circuits consisting of a 50-Ω series resistor and limiting diodes. Thus, for one levels $<$ +12.7 V and zero levels $>$ -7.7 V, no damage can occur.

Pulse Commands. For narrow pulses the voltage rating can be much greater. For instance, with a 1% duty-ratio pulse, the one level can go to +75 V and a zero level can go to -70 V.

Table 3-12
MAXIMUM RESOLUTIONS FOR IDEAL SINE WAVES

INPUT SIGNAL PEAK	PERIODS OR RATIOS AVERAGED SETTINGS 1	10	10^2	10^3	10^4	10^5
10 mV	2×10^{-3}	2×10^{-4}	2×10^{-5}	2×10^{-6}	2×10^{-7}	2×10^{-8}
100 mV	2×10^{-4}	2×10^{-5}	2×10^{-6}	2×10^{-7}	2×10^{-8}	2×10^{-9}
1 V	2×10^{-5}	2×10^{-6}	2×10^{-7}	2×10^{-8}	2×10^{-9}	2×10^{-10}
10 V	2×10^{-6}	2×10^{-7}	2×10^{-8}	2×10^{-9}	2×10^{-10}	2×10^{-11}
100 V	2×10^{-7}	2×10^{-8}	2×10^{-9}	2×10^{-10}	2×10^{-11}	2×10^{-12}

To find the maximum safe zero level, V_1, if the one level, V_2, $\leqslant +5.7$ V, use Figure 3-9, after first computing the duty ratio, $(\frac{t_1}{t_1 + t_2})$, using t_1 as the time duration at the V_1 level and t_2 as the time duration at the V_2 level.

Double Limiting. If the limiting circuit is active during the V_2 level, as well as during the V_1 level, so that the V_2 level $\geqslant +5.7$ V and the V_1 level also $\leqslant -0.7$ V, use one of the equations below.

If V_1 is known

$$V_2 \text{ max} = \left(\sqrt{\frac{50\,(t_1 + t_2) - (|V_1| - 0.7)^2 \times t_1}{t_2}}\right) + 5.7,$$

If V_2 is known

$$V_1 \text{ max} = -\left(\sqrt{\frac{50\,(t_1 + t_2) - (V_2 - 5.7)^2 \times t_2}{t_1}}\right) - 0.7.$$

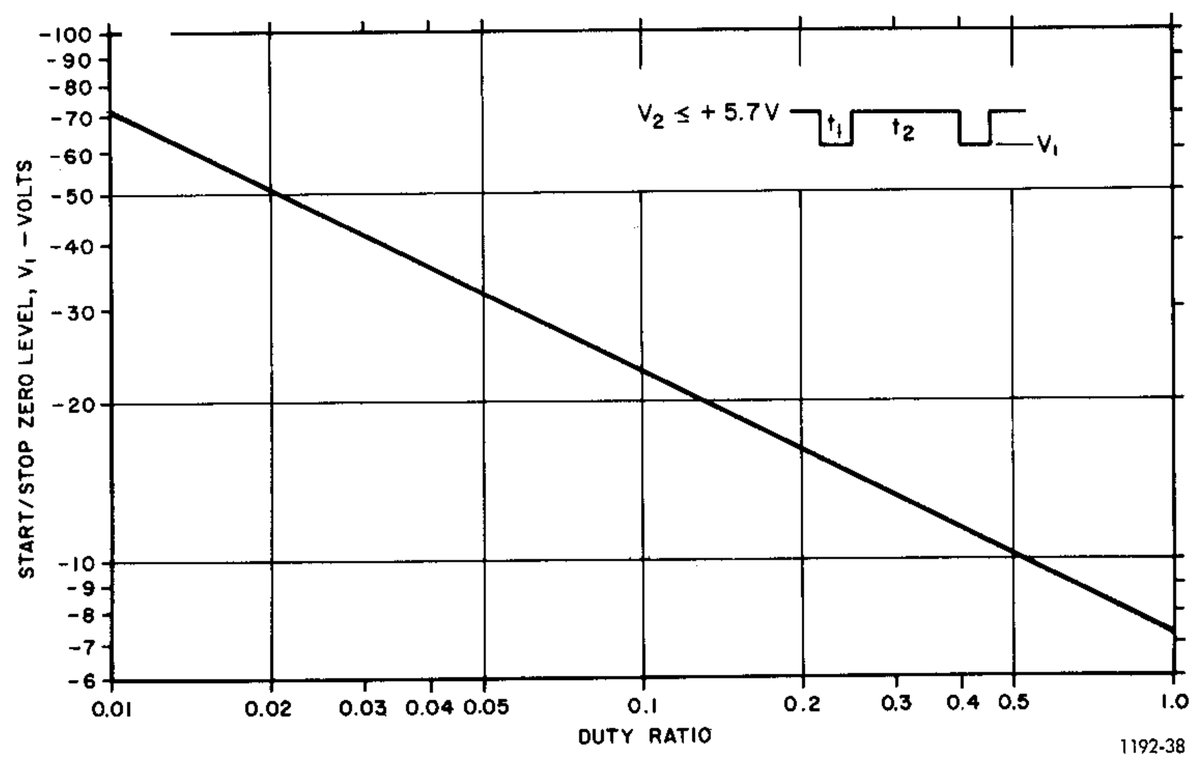

Figure 3-9. Maximum start/stop pulse voltage ratings with respect to duty ratio.

Theory–Section 4

4.1 BLOCK DESCRIPTION 4-1
4.2 INPUT CIRCUIT (BOARD B) 4-4
4.3 TIME-BASE OSCILLATOR (BOARD C) 4-4
4.4 DIVIDER CIRCUITS (BOARD B) 4-6
4.5 REGISTER CIRCUIT (BOARD C) 4-8
4.6 DISPLAY CIRCUIT (BOARD C) 4-10
4.7 BUFFER CIRCUIT (BOARD D) 4-11
4.8 PROGRAM CIRCUIT (BOARD B) 4-11
4.9 MEASUREMENT MODES 4-11

Mnemonic identity codes for signals occurring in the counter, and frequently referred to in this section, are fully described in the "SIGNAL INDEX" in Section 6.

NOTE

Each reference designator used in our schematic diagrams and circuit descriptions now includes an initial letter, before a hyphen, to identify the subassembly. The numeric portion of each designator is generally shorter than would be the case if a block of numbers was assigned to each subassembly. A new designation WT (wire-tie point) replaces the customary AT (anchor terminal). The letter before the hyphen may be omitted only if clearly understood, as within a subassembly schematic diagram.
Examples: B-R8 = B board, resistor 8; D-WR2 = D board, wire-tie point 2, CR6 on the V schematic is a shortened form of V-CR6 = V board, diode 6. The instrument may contain A-R1, B-R1, C-R1, and D-R1, etc.

4.1 BLOCK DESCRIPTION.

4.1.1 Introduction. (Figure 6-3).

An electronic counter counts electrical pulses, one at a time, and displays the total. The total is equal to the rate at which the pulses occur (for periodic signals) multiplied by the time the counter is allowed to count (Figure 4-1).

The type of measurement made depends on the source of the pulses and the source of control for the counting time. The pulse source can be the signal to be measured (input signal) or the internal 10-MHz oscillator (clock signal). The counting-time control source can be manually operated pushbuttons, the input signal, or the clock signal (Table 4-1).

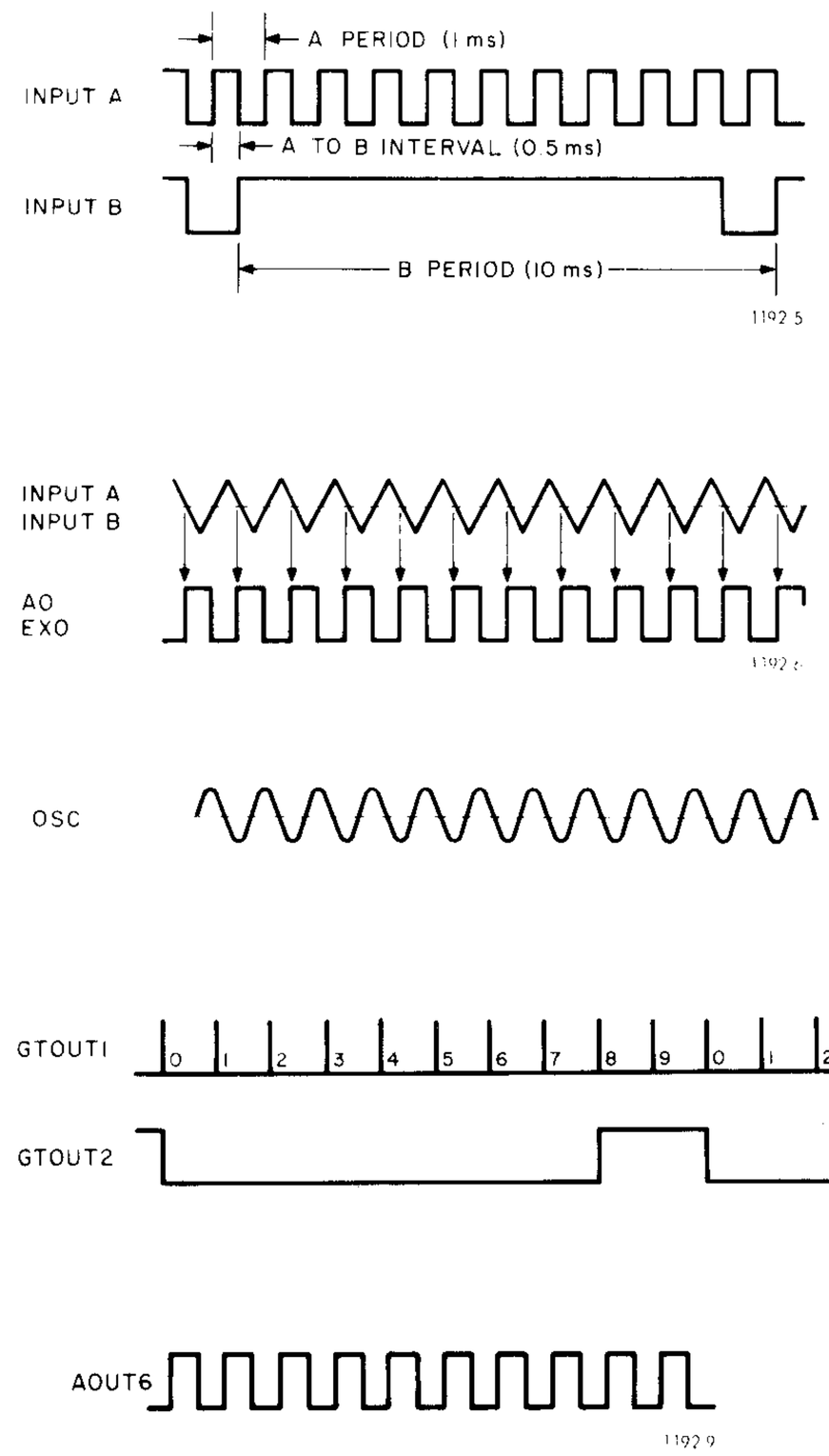

Figure 4-1. Relation of internal time-base signals to the counting operation.

Table 4-1
COUNTING-TIME CONTROL SOURCES

Measurement	Counting (pulse source)	Timing (control source)	Count (pulse rate X counting time)	Example
COUNT	Input A	Manual	Input A rate X START-to – STOP time	A 1-kHz symmetrical square-wave input signal is applied, the START button is pushed, and, after 10 seconds, the STOP button is pushed. Count = 10^3 X 10 = 10^4 = 10,000.
PERIOD 0.1 μs	Clock (10 MHz)	INPUT A	Clock rate X input A period X number of periods averaged	A 1-kHz symmetrical square-wave input signal is applied, the count starts automatically with one negative zero-crossing and stops with the next. Count = 10^7 X 10^{-3} = 10^4 for one period. Since each clock period is 10^{-7}s, measurement = 10^4 X 10^{-7} = 10^{-3} = 1 ms.
1 μs	Clock (1 MHz)	INPUT A	Clock rate X input A period X number of periods averaged	Using the 1-kHz square-wave input, count = 10^6 X 10^{-3} = 10^3 for one period. Since each clock period is 10^{-6}s, measurement = 10^3 X 10^{-6} = 10^{-3} = 1 ms.
10 μs	Clock (100 kHz)	INPUT A	Clock rate X input A period	Using the 1-kHz square-wave input, count = 10^5 X 10^{-3} = 10^2 for one period. Since each clock period is 10^{-5} s, measurement = 10^2 X 10^{-5} = 10^{-3} = 1 ms.
FRE-QUENCY	Input A	Clock	Input A rate X clock period (or decade multiple of clock period)	A 1-kHz symmetrical square-wave input signal is applied, the count starts automatically and, if GATE TIME is set to 1 s, stops precisely 10^7 clock periods (10^7 X 10^{-7} = 1 s) later. Count = 10^3 X 1 = 10^3 = 1000 counts in one second; measurement = 1 kHz.
TIME INTER-VAL	Clock (0.1, 1 or 10 μs)	START and STOP	Clock rate X input interval	1. A negative-going pulse is fed into the START input at time zero and the time interval is initiated. The next negative-going pulse fed into the STOP input will terminate the measurement (assuming that the start pulse has been terminated). 2. Ground the STOP input and feed a negative-going pulse with a duration equal to the desired time interval into the START input. The measurement will start on the negative-going transition and terminate on the positive-going transition.

Table 4-1 (cont.)
COUNTING-TIME CONTROL SOURCES

Measurement	Counting (pulse source)	Timing (control source)	Count (pulse rate X counting time)	Example
RATIO (A/B)	Input A	Input B	Input A rate X input B period	A 1-kHz symmetrical square-wave input signal is applied to input A and a 100-Hz pulsed input signal is applied to input B. The count starts automatically with one positive zero-crossing of input B and stops with the next if number of RATIOS AVERAGED is set to 1. Count = 10^3 X 10^{-2} = 10; i.e., input A is ten times the frequency of input B.

4.1.2 Input Circuits.

Input A. The signal to be measured is applied to the INPUT A connector on the front panel. The signal is fed through the AC-DC and ATTEN switches into the input circuit (paragraph 4.2) and processed to form a pulse output at the desired triggering threshold (negative-going zero-crossing).

Input B. The INPUT B connector is located on the rear panel. A signal is fed into this connector for a RATIO measurement or to phase lock the internal crystal oscillator to an external standard of 1 MHz or 100 kHz. The input signal is amplified and converted to a square wave (AO, EXO).

4.1.3 Clock.

The clock signal (OSC) is the output of a precision 5-MHz oscillator doubled to 10-MHz. The OSC signal is fed into a doubler circuit for conversion to 10 MHz. This 10-MHz signal is applied to a Schmitt circuit for processing into a square-wave input for the clock divider. The clock divider is a series of three decade counters that divide the input 10-MHz signal down to output signals of 1 MHz, 100 kHz and 10 kHz.

4.1.4 Timing.

Timing, in part, is controlled by the time base, which contains five cascaded decades. By means of the range switch, the output (Figure 4-1) from any one of the decades can be selected as the output from the time base (GTOUT2).

Before each measurement, an RE3 pulse presets all time-base decades to 9. The first input pulse (GTOUT1) to the time base, after the RE3 pulse is terminated, therefore, sets all decades to 0 and produces an output pulse from each decade.

Since the output from one decade is always selected by the range switch as the output from the time base, the first GTOUT1 pulse produces an output (GTOUT2) from the time base. The occurrence of the next GTOUT2 pulse is determined by the setting of the range switch; e.g., if it is set to 10, the next GTOUT2 pulse occurs after 10 GTOUT1 pulses.

4.1.5 Counting.

The pulses to be counted (AOUT6) are applied to the decade-counting registers, the counting registers count them, and storage registers store the count.

The stored count is applied to the display circuit, which contains the decorders and readout tubes used to display the count visually.

4.1.6 Display Time.

After a measurement has been completed, a negative CG pulse (Figure 4-2) is generated. The negative CG transition

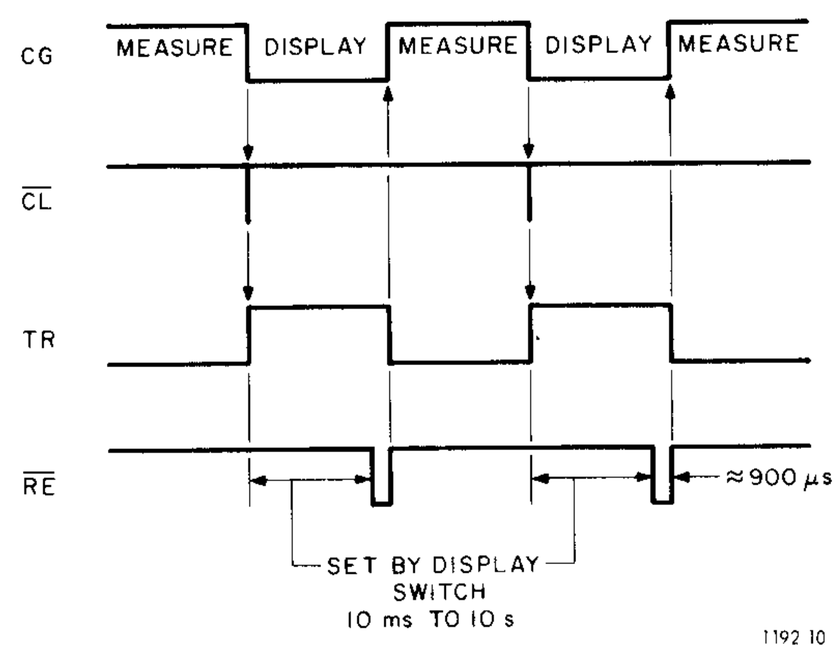

Figure 4-2. Display timing diagram.

triggers a clear pulse ($\overline{CL}$) and a transfer pulse (TR) that are used to transfer the data from the counting register to the storage register.

The negative CG transition also triggers a delay whose duration is controlled by the DISPLAY control. During this delay, no new measurement can be made. After the delay, an $\overline{RE}$ pulse occurs, which sets the counting register to zero, sets the time-base decades to 9, and resets the main and counting gates in preparation for a new measurement. The counting gate disconnects the counting decades from the storage decades.

4.2 INPUT CIRCUIT (BOARD B).

4.2.1 General.

The input circuit contains two separate channels, A and B.

INPUT A is the main input used in all the measurement modes except TIME INTERVAL. This input has a control to switch the input from ac to dc coupling. The attenuator and amplifier are used to condition the signal before the threshold detector. A TRIGGER LEVEL control is provided to adjust the threshold detector level. The INPUT A circuit operates on the negative-going transition of a pulse.

INPUT B is used in the RATIO mode and to lock the internal crystal to an external signal. The triggering level of this channel is fixed and triggering occurs on the positive-going transition of a pulse.

4.2.2 Coupling and Attenuation. (Figure 6-4.)

The signal to be measured is applied to the INPUT A connector, A-J1 on the front panel, and passes through the ac-dc switch, A-S2, when the switch is set to dc or through A-C1, when it is set to AC. The signal is then applied directly to the symmetrical trigger stage or through a X10, X100 or X1000 attenuator to the symmetrical trigger, depending on the setting of the INPUT ATTEN pushbuttons. The INPUT ATTEN pushbutton switches, B-S1A and B-S1B, have four possible combinations of attenuation. If both switches are left out, the attenuation is zero; if the 10:1 switch is depressed, the attenuation is X10; if the 100:1 switch is depressed, the attenuation is X100; and if both the 10:1 and 100:1 switches are depressed, the attenuation is X1000.

4.2.3 INPUT AMPLIFIER

The input amplifier consists of three differential amplifier stages in cascade. At the input are a series resistor and two limiter diodes used to limit the input signal. The first stage of the amplifier is a dual n-channel FET. The FET has extremely high input impedance and, by being dual, it has very good temperature stability. The second stage is a differential amplifier followed by a third stage differential amplifier. The third stage drives the level detector, which translates the input signal to a squared output with very fast transitions. Typically, an input signal of 7 mV rms is enough to drive the Schmitt circuit.

Trigger-Level Control. The trigger-level control on the front panel (A-R2) sets the dc voltage applied to the reference gate input, of the dual FET. This dc level change is translated to the input-signal side of the FET, so that the trigger level is varied at the input within the range of ±100 mV. When the attenuator is used the trigger level can be expressed as trigger level = ±(100)x attenuator setting in mV, so that the trigger levels for the range of attenuator settings are ±100 mV, ±1 V, ±10 V, and ±100 V.

4.2.4 SCHMITT CIRCUIT

The Schmitt circuit is a level detector where the output goes to a "1" state for input above a level V_2 and goes to a "0" state output for a level below V_1. The difference between V_2 and V_1 is called the hysteresis of the circuit. When the hysteresis is translated to the input terminal, it is typically 7 mV rms (20 mV pk-pk). The smallest signal amplitude that will typically trigger the counter is 7 mV and, if the attenuator is used, the counter sensitivity is 7 mV x attenuator setting, or 7 mV, 70 mV, 700 mV, or 7 V for the four attenuator settings. The trigger-level control can move the hysteresis within range shown in the previous paragraph.

4.3 TIME-BASE OSCILLATOR (BOARD B). (Figure 6-7.)

4.3.1 General.

The clock circuit generates a 10-MHz clock signal that is counted by the register circuit for period or time-interval measurements, or is used by the clock divider to obtain precise time intervals for frequency measurement. The clock signal is also applied to the input circuit for use as a 100-kHz test signal. The clock frequency can be phase-locked to an external source for greater accuracy.

4.3.2 Frequency Control.

The clock signal originates in a 5-MHz crystal-controlled oscillator B-Q1. The frequency is adjusted by B-C3 and a dc voltage, VA, applied to a varactor, B-CR1. The capacitance of B-CR1 is determined by the VA potential, a dc voltage applied from the phase-lock detector.

The 5-MHz output from the oscillator is fed into a buffer amplifier, B-Q2, and doubled at the collector of B-Q3. B-Q4 is a level amplifier to lower the oscillator level to an amplitude necessary to drive an integrated Schmitt circuit. The output from B-Q4 collector is the OSC 10-MHz signal. This signal is fed to a Schmitt circuit for translation to square waves and then to the clock divider to produce 1-MHz, 100-kHz and 10-kHz outputs.

4.3.3 Phase Lock.

The internal crystal oscillator can be locked to an external frequency source having a frequency of 1 MHz or 100 kHz and an amplitude larger than 100 mV rms. This signal is applied to the INPUT B connector, A-J3, on the rear panel. This signal is amplified and squared in the input B circuit and applied to the pulse detector as EX01 and

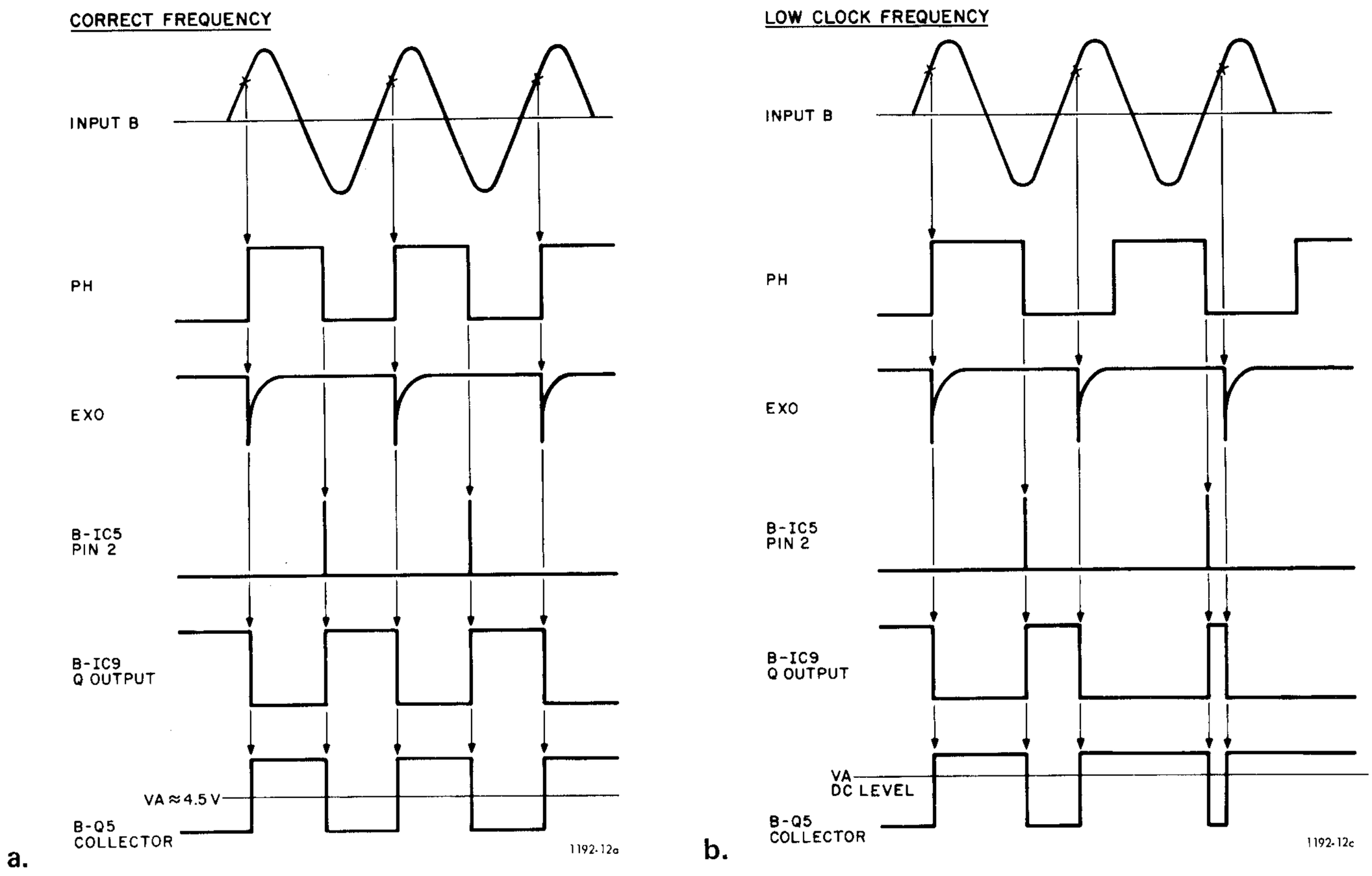

is then compared with the internal clock signal, PH, in a phase detector, B-1C9. The 1-MHz or 100-kHz internal clock signal must be selected by a rear-panel pushbutton switch.

Figure 4-3a shows the timing of the signals when the oscillator frequency corresponds to the external frequency. The PH signal switches B-IC9 to its Q state and the external input signal switches it back to the $\overline{Q}$ state, 180° later. The output waveform from this action is an exact square wave. This waveform in inverted, integrated and supplied to the varactor diode. The dc value is approximately +4.5 V.

Figure 4-3b shows the timing when the internal clock frequency is lower than the externally applied lock signal. The PH signal switches B-IC9 to its Q state and the external signal returns it to the $\overline{Q}$ state earlier than for the correct frequency. This signal is then inverted and integrated before being applied to the varactor diode. The dc level is more positive than for the correct frequency, causing the capacitance of the varactor diode to be decreased and the internal clock frequency to be increased, bringing it into lock with the external signal.

Figure 4-3c shows the case where the internal clock frequency is higher than the externally applied frequency. The phase-lock circuit now produces a dc level to the varactor diode that is less than 4.5 V, increasing the capacitance of the varactor diode and decreasing the internal clock frequency until it locks with the externally applied signal.

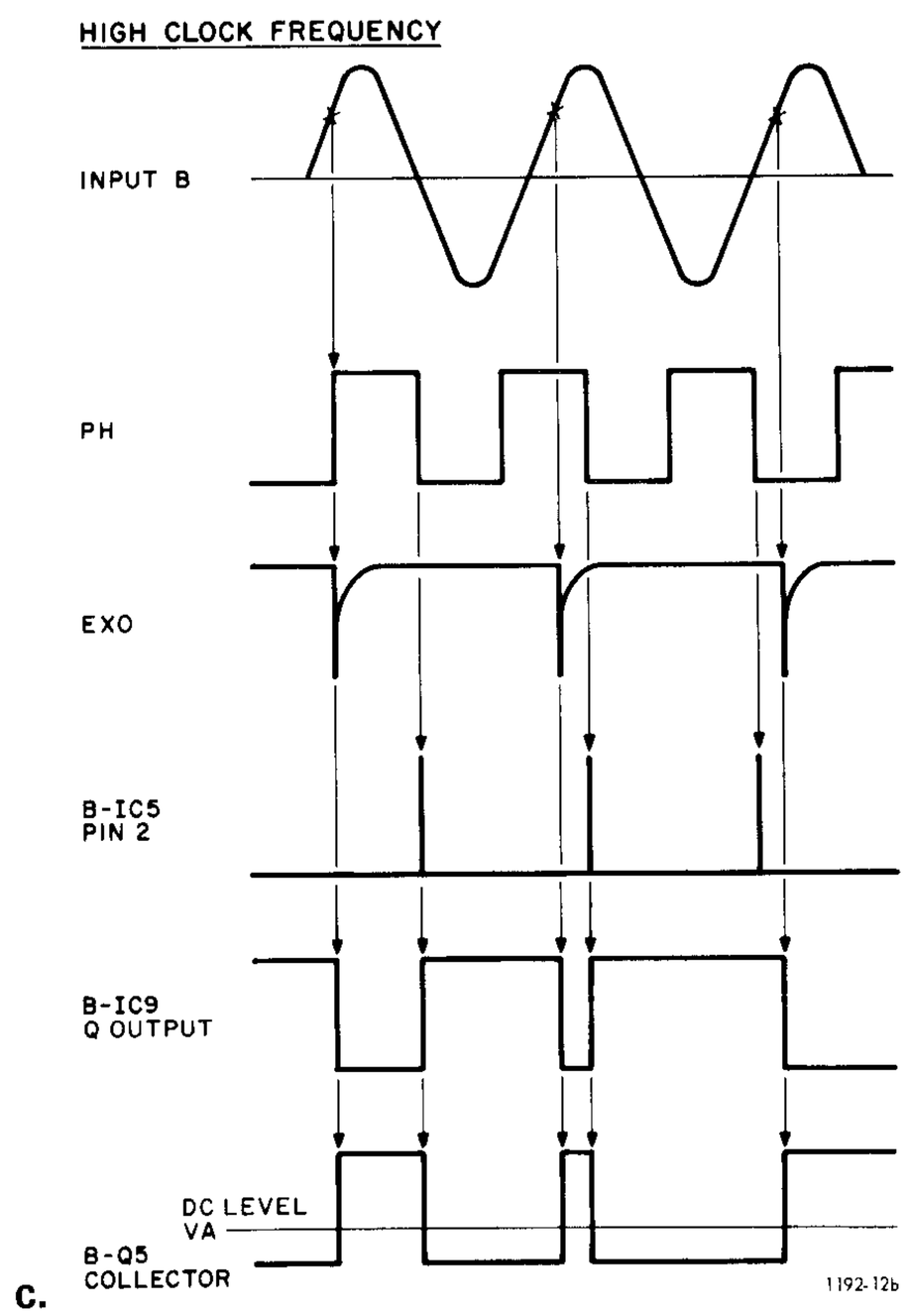

Figure 4-3. Phase-lock diagrams for clock frequencies: a. correct, b. low and c. high.

Table 4-2
TIME-BASE ACCURACY

Time base	Temperature drift: ±Drift/C°	Temperature drift: Worst drift within temp. range	±Drift With ± 10% Line-Voltage Variation	± Long Term Drift
INTERNAL OSCILLATOR	0° - 55°C <3 X 10^{-7}/°C	0°C - 55°C <4 X 10^{-6}*	<2 X 10^{-8}	<2 X 10^{-6}/month
EXTERNAL LOCK SIGNAL	0° - 50°C <1X10^{-11}/°C	0° - 50°C < 1 X 10^{-11} /°C	<1 X 10^{-11}	<1 X 10^{-10}/day

*Total drift from frequency at room temperature (23°C) from 0° to 55°C.

4.3.4 Time-base Accuracy.

General. The accuracy of the frequency, period, and time-interval measurement modes is affected by time-base accuracy, which is dependent on the stability of the internal crystal oscillator.

The oscillator drifts with temperature changes, line-voltage changes, and aging. If the internal oscillator is locked to an external stable oscillator, like the 1115-C, the drift will be that of the external oscillator only.

The internal oscillator can be adjusted if maximum accuracy is desired. The instrument should first operate for 1 or 2 hours in the environment in which it is used.

Calibration. To set the internal crystal oscillator, use the counter to measure the output from a known frequency source and then adjust the internal oscillator until agreement is reached.

Settings. For frequencies >330 kHz, push the frequency button and set the range switch to gate of 10 s. Apply a known signal to input A. Adjust the internal oscillator, through the hole in the bottom of the cabinet, until the known frequency is displayed. If the input signal is 1 MHz, the oscillator can be set to ±1 X 10^{-7}. If the input signal is 10 MHz, the oscillator can be set to ±1 X 10^{-8}.

For a frequency of <330 kHz, push the 0.1 μs period button and set the number of periods to 10^5. For a 100-kHz signal, the oscillator can be set to ±1 X 10^{-7}. For a 10-kHz signal, the oscillator can be set to ±1 X 10^{-8}, but it is not feasible to set the oscillator much closer than 1 X 10^{-7}, on account of temperature drift.

The internal crystal oscillator can also be set to ±1 X 10^{-7} if heterodyned in a radio receiver against WWV and adjusted for zero beat.

4.4 DIVIDER CIRCUITS (BOARD B AND C).

4.4.1 General. (Figures 6-7/6-13.)

The time-base divider controls the timing of the counter (the length of time the counting register is allowed to count). The output is controlled by the range switch, which together with the measurement pushbuttons, controls the measurement characters, i.e., the unit of measurement (symbol) and the decimal-point location. The exact function of the time-base divider depends on which measurement button has been depressed. It is used to count-down the clock frequency, to generate the exact gate length, or to count-down the INPUT A to determine the number of periods counted, or the same for the input signal in the ratio measurement mode. The basic function, however, is that of a decade divider.

The clock divider is also a series of decade dividers. These dividers are used to divide the oscillator frequency down from 10 MHz to 1 MHz and 100 kHz (all 3 used as the clock for PERIOD mode) and to 10 kHz for FREQUENCY.

4.4.2 Decade Operation.

The time-base circuit contains five cascaded IC decades, (IC36-IC40), the clock divider contains three (IC1-IC3), each of the integrated circuits consists of four flip flops (see Figure 4-4). The flip flops are connected in series and, with feedback, count down 10:1. Each is a normal J-K flip-flop, in which the output changes only with a negative-going transition applied to the CP inputs, which occur only when the output of the preceding flip-flop changes from 1 to 0.

The CP input normally is a complementing input; i.e., when an input pulse arrives, the flip-flop changes state, if it was in the Q state (A, B, C, or D = 1) it changes to the $\overline{Q}$ state ($\overline{A}$, $\overline{B}$, $\overline{C}$, or $\overline{D}$ = 1) and (A, B, C, or D = 0) or if it was in the Q state it changes to the Q state. However, additional signals are applied to the J input of ffB and to the R and S inputs of ffD to convert what normally would be simple binary counting (division by 16) to 1-2-4-8 binary-coded-decimal counting (division by 10).

Outputs. At the tenth input pulse, a decade produces an output that is applied to the input of the next decade. The input to the first time-base decade, IC36, is GTOUT1 (TB1 in the clock divider), therefore, the negative output transition from decade 1 occurs after ten such pulses. The negative-output transition from decade 2 occurs after 100 GTOUT1 (TB1) pulses, and so on. Since there are five decades in the time-base circuit, the circuit can count down

Table 4-3
DECADE COUNTING SEQUENCE

Input Pulse	ffA(1) A	ffB(2) B	ffC(4) C	ffD(8) D	Decimal	Notes
none	0	0	0	0	0	C=0 which sets S input of ffD to 0 and prevents it from setting to D. D=0 which sets R input of ffD to 0 and prevents it from setting to $\overline{D}$. $\overline{D}$=1 which sets J input of ffB to 1 and allows it to set to B.
1st	1	0	0	0	1	
2nd	0	1	0	0	2	
3rd	1	1	0	0	3	
4th	0	0	1	0	4	
5th	1	0	1	0	5	
6th	0	1	1	0	6	C=1 which sets S input of ffD to 1 and allows it to set to D.
7th	1	1	1	0	7	
8th	0	0	0	1	8	C=0 which sets S input of ffD to 0 and prevents it from setting to D. D=1 which sets R input of ffD to 1 and allows it to $\overline{D}$. $\overline{D}$=0 which sets J input of ffB to 0 and prevents it from setting to B.
9th	1	0	0	1	9	
10th	0	0	0	0	0	D is set to 0 directly by A. B (and therefore C) is prevented from setting to 1 by the 0 level at at the ffB J input.

GTOUT1 by up to 10^5. The clock divider starts with a 10-MHz signal and divides it down to 10 kHz, by a factor of 10^3. Table 4-3 shows the counting sequence of a decade counter and Figure 4-4 shows the connections of a decade counter.

4.4.3 Timing.

Range Signals. The output from the last flip-flop of each decade (D TOUT 1 – DTOUT 5) is connected through the range switch, to the main gate flip-flop input-CP terminal, as GTOUT 2.

Timing Signal. The outputs of all the time-base dividers are connected to C-S1 and leave the range switch as the GTOUT2 signal. At the end of the display cycle, a reset pulse is generated, RE3, which sets all the time-base dividers to 9.

The first GTOUT1 pulse, therefore, sets all decades to 0. Since all decades produce an output on the 9-0 transition, and since the range switch always is connected to one of the time-base divider outputs, except in time interval, the first GTOUT1 pulse produces a GTOUT2 pulse (negative

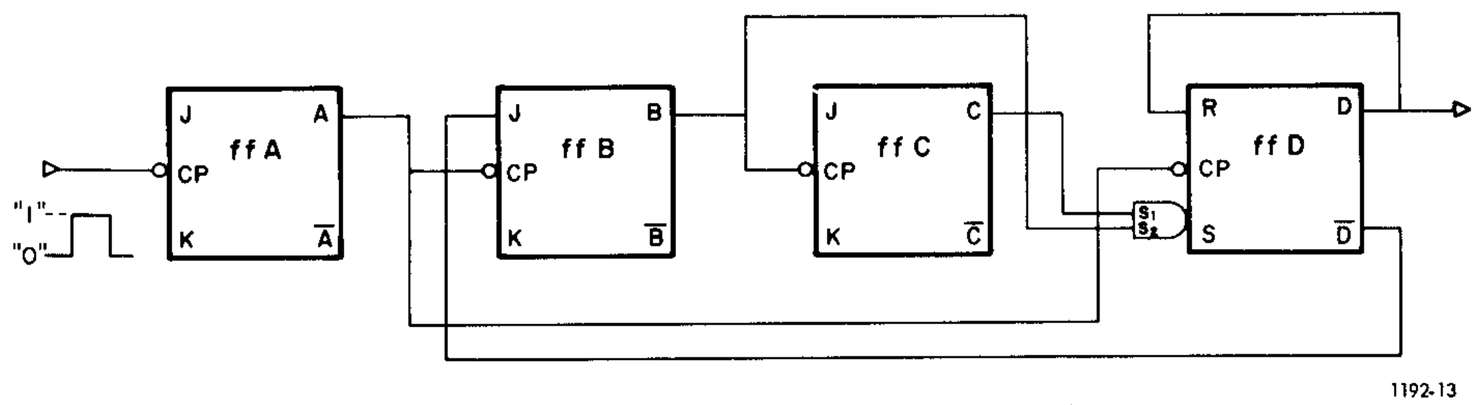

Figure 4-4. Basic decade counter logic.

transition). This opens the main-gate and the next GTOUT2 negative transition closes the main gate. The GTOUT1 pulse occurs a multiple of 10 after the first GTOUT1 pulse.

General. The range switch and measurement pushbuttons automatically select the proper unit of measurement or symbol and decimal point for the measurement being made, Table 4-4).

Symbol. A 3-in. plastic disk is attached to the range switch behind the front panel. This disk contains a set of symbols for each setting of the range switch; one set for frequency measurements, one for period measurements, and one for time interval measurements. No symbol is necessary for ratio or count measurements. The symbol for time-interval measurements is always ms; see Table 4-4.

Behind the disk is a set of two lamps, one of which is energized by the appropriate signal from the measurement pushbuttons. Each lamp illuminates the proper symbol for the measurement being made.

Decimal Point. In addition to the contacts that enable the gates, the range switch also contains four sets of contacts to energize the decimal points in the readout tubes: one set is for frequency measurements and three are for period and time-interval measurements (0.1, 1, and 10 μs). No decimal point is necessary for count or ratio measurements.

Since the decimal points are actually cathodes in the readout tubes, they are energized by returning them to ground. The ground-level signals are the same signals used to energize the symbol lamps and are applied to the appropriate section of the range switch to energize the proper decimal point.

4.5 REGISTER CIRCUIT (BOARD C). (Figures 6-11/6-12.)

4.5.1 General.

The register circuit contains a counting register that counts the pulses applied to it and a storage register that holds the count while the counting register proceeds with another measurement.

Table 4-4
CHARACTER INDICATION

Range	Frequency		Period and Time Interval					
	Decimal	Symbol	Decimal	Symbol	Decimal	Symbol	Decimal	Symbol
100 μs - 1	D2	MHz	D4	ms	D3	ms	D2	ms
1 ms - 10	D3	MHz	D2	μs	D1	μs	D1 (right)	μs
10 ms - 10^2	D4	MHz	D3	μs	D2	μs	D1	μs
100 ms - 10^3	D2	kHz	D4	μs	D3	μs	D2	μs
1s - 10^4	D3	kHz	D2	ns	D1	ns	D1 (right)	ns
10s - 10^5	D1	Hz	D3	ns	D2	ns	D1	ns
TIME INTERVAL	—	—	D4	ms	D3	ms	D2	ms

4.5.2 Counting Register.

Count. The counting register contains five, six, or seven cascaded IC decades that are the same type of decade and operate in the same manner as those used in the time-base circuit (paragraph 4.4.2), with the exception of the differences explained in the following paragraphs.

Input Decade. The first, or input, decade consists of two IC's instead of one, C-IC41 and C-IC27. The counting register must be capable of operating up to 32 MHz, but the normal IC decades operate up to 18 MHz (under typical conditions). Therefore, a 50-MHz flip-flop is used at the input, which divides the input signal by two. This flip-flop, C-IC41, operates in the same manner as flip-flop A in the normal decade.

Decade Outputs. Only the outputs from the last flip-flop (D or 8-weighted) are used from the clock decades, but the outputs from all flip-flops are used from the counting-register decades to provide a full 1-2-4-8 BCD output.

Reset. At the end of the display and before the next measurement starts, an RE3 signal from the program circuit sets the time-base decades to 9. Reset signals RE1 and RE2 are applied to the opposite reset output of the counting register decades and sets them, instead, to 0. An $\overline{RE2}$ signal, concurrent with RE3 and also from the reset circuit, sets the input flip-flop to 0. Thus, before a measurement, all counting-register decades are set to 0.

Input. The counting register counts the AOUT5 pulses. The source of these pulses depends on which measurement button is pushed and can be the input signal for frequency, ratio count and the clock signal, or the clock signal counted down, for period and time interval.

4.5.3 Storage Register.

General. Each data line from the decades in the counting register is applied to a storage flip-flop made up of two cross-coupled NAND gates. These storage flip-flops can be connected directly to the counting decades, via the transfer gates.

In the non-storage mode, the transfer gates are always open and the state of the storage flip-flops will change with the changes of state in the counting decades.

In the storage modes, the transfer gates are open only during the display times. While driving the reset and counting times, they are disconnected from the counting decades, storing the states from the previous cycle.

Storage Flip-Flops. Details for each DTL storage flip-flop are shown in Figure 4-5. The outputs are NPN transistors, with the emitter grounded and the collector returned to + 5 V through a 6-kΩ resistor.

If two outputs are connected in parallel and any two transistors turn on, the output goes to the "0" state and changes the state of the flip-flop.

Thus, if $\overline{CL2}$ goes to the 0 state, the output of G1 goes to the "1" state and output of G2 goes to 0 state, so long as the transfer gate is closed (with TR1 in the 0 state). The flip-flop can go to the opposite state if the output of transfer gate G3 goes to 0 state. Then, the output of G1 goes to 0 and the output G2 goes to "1".

Transfer gate The flip-flop is a 2-input NAND gate, where one input is the transfer signal, TR1, and the other is the output of the counting decades. When TR1 goes to the 1 state and the counting decade is also in its 1 state, the output is 0, otherwise it is always 1.

Non-Storage Mode. When the storage on-off pushbutton switch on the rear of counter is set to off, the clear input $\overline{CL2}$ is always in its 0 state and the transfer input, TR1, is always in the 1 state. (See Figures 4-5 and 4-6). If the output of the counting decade is in the 1 state, the output of transfer gate G3 is "0". As G1 and G3 are connected in parallel, the output of G1 is 0 and output of G2 is 1, and the input to G2 is 0. The storage flip-flop has the same state as the counting flip-flop. If the counting flip-flop goes to its 0 state, the output of G3 is 1 and it will no longer pull down the output of G1, so the storage flip-flop will go to its natural state. With $\overline{CL2}$ in its 0 state the output of G1 is 1 and, as G3 output is 1, the input to G2 is 1 and the output goes to 0. Thus, the storage flip-flop has the same state as the counting flip-flop during the count, reset, and display modes.

Storage mode. When the storage on-off pushbutton switch on the rear of counter is set to ON, the transfer pulse input, TR1, is connected to the transfer circuit and it is always at 0, except during the display cycle, and the clear input $\overline{CL2}$ is always 1, except just in the beginning of the display cycle. During the count cycle TR1 is 0 and the output of transfer gate G3 is 1, so no change of the storage flip-flop can take place independent of the state of the counting decade.

At the beginning of the display cycle, a clear command is applied, in which $\overline{CL2}$ goes to 0 and TR1 (transfer pulse) goes to 1. If the counting decade is in its 0 state, the output of G3 is 1 and, as the input to G1 is 0, the output of G1 is 1 and G2 is 0, the same as the counting decade. At the end of the display cycle, TR1 goes to 0, which shuts off the transfer gate, so the previous result is stored in the storage flip-flop through the resetting of the counting decades and

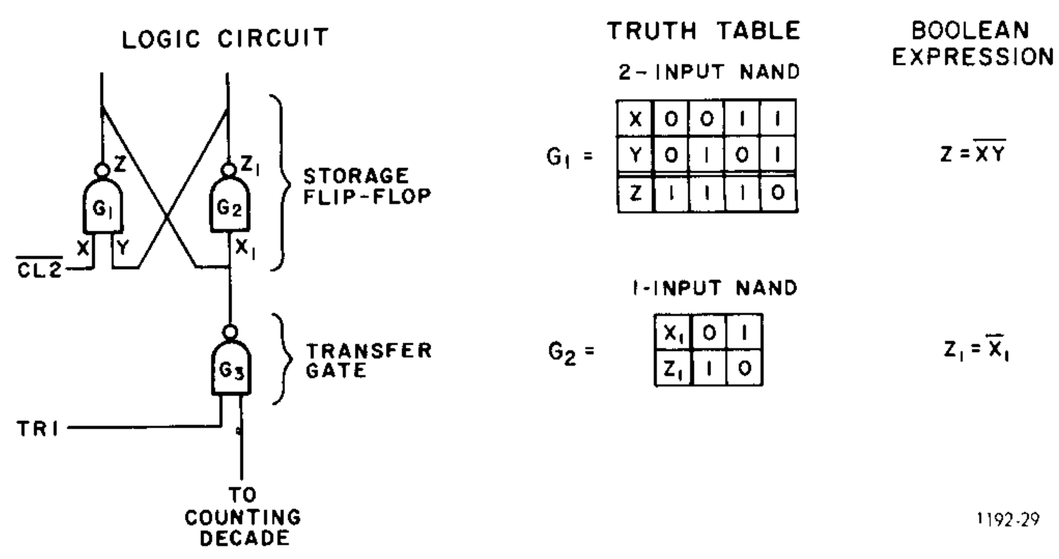

Figure 4-5. Storage register operation.

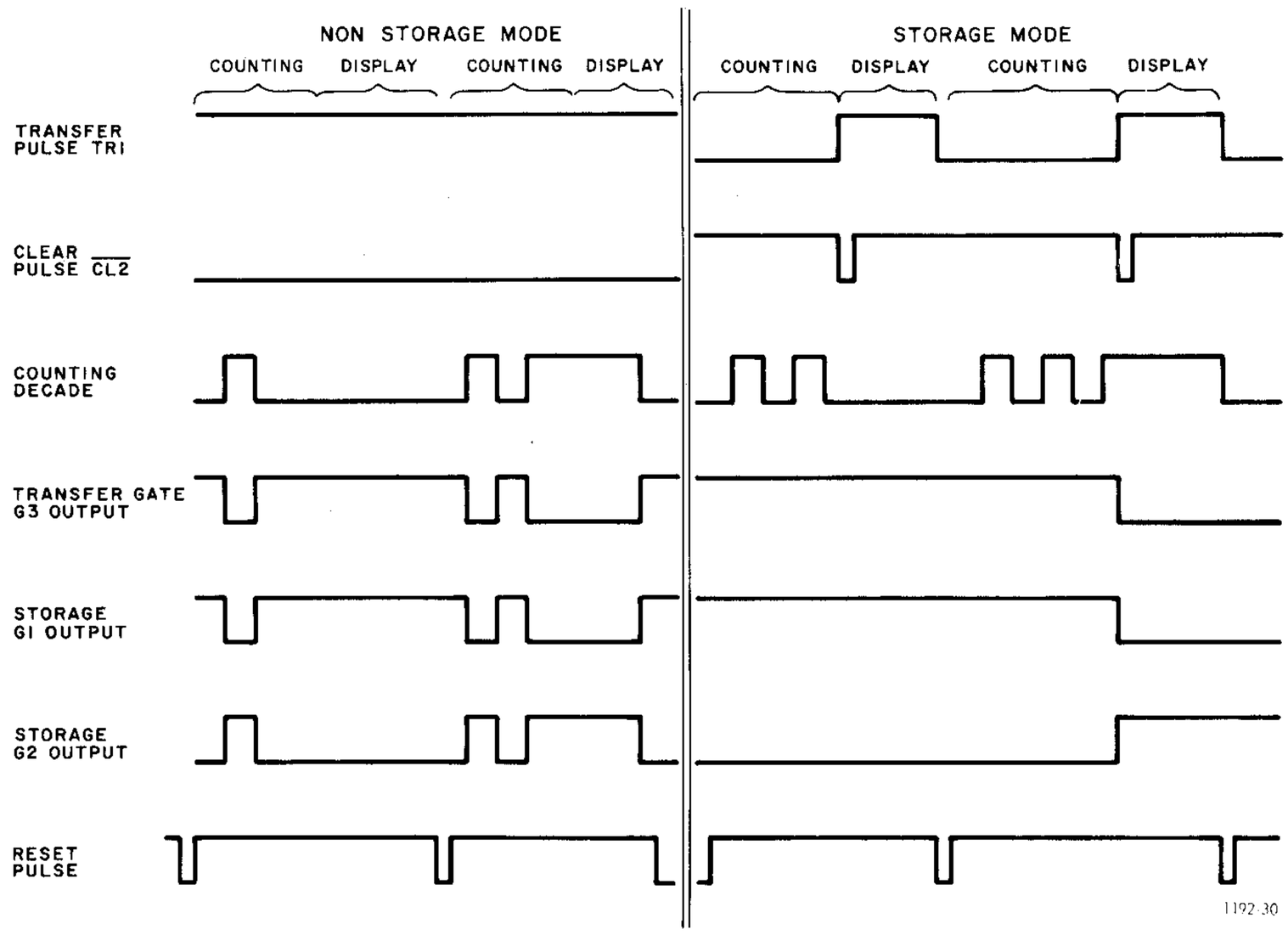

Figure 4-6. Storage register timing diagram.

the next count cycle. At the second display cycle, the counting decades are 1, so the G3 output is 0, switching gate G1 output to 0 and G2 to 1.

Jam Transfer. A clear-and-transfer period (jam transfer) occurs at the end of each measurement. The $\overline{CL2}$ pulse clears the storage flip-flops of previous data and the TR1 pulse reads in the new data. After the TR1 pulse, the transfer NAND gate is inhibited and prevents any further changes in the decade output from affecting the stored data until the next jam transfer. Note that with jam transfer the storage register changes directly from the old data to the new data with no intermediate step, such as a zero-set,as is common in many storage-type counters. Advantages of jam transfer are less rf noise from the counter due to readout-tube switching and less noise in the output data.

4.6 DISPLAY CIRCUIT (BOARD C). (Figures 6-11/6-12.)

4.6.1 General.

The display circuit converts the BCD data from the register circuits to decimal data and applies it to the gas readout tubes to provide a visual display of the measurement value.

4.6.2 Decoding.

Decimal Data. The 1-2-4-8 BCD data (E11 through E78) from the storage registers are applied to an associated decoder (C-IC42 through C-IC48) in the display circuit. The decoders convert the BCD data to decimal data and apply it to the appropriate cathode of an associated cold-cathode gas-readout tube (C-V1 through C-V7), which ionizes the surrounding gas to illuminate the proper number.

Decimal-Point Signals. The decimal-point signals are D1 through D7. The proper decimal point is automatically energized by the range switch and measurement push-buttons (paragraph 4.4.3).

4.7 BUFFER CIRCUIT (BOARD D). (Figure 6-15.)

4.7.1 General.

The buffer circuit is used for the data-output option counters. It provides 1-2-4-8 BCD measurement data to the DATA OUTPUT socket, D-J1 on the rear panel, for use by a printer or other piece of data-handling equipment.

4.7.2 Operation.

Buffered Data. Signals D11 through D78 are the outputs from the buffered-data circuit that consists of five IC's, each of which contains six inverters. A set of four inverters is used to buffer the output from each of the storage flip-flops in the register circuit. The inverters consist of DTL integrated circuits with a driving capability of 5 V behind 6 kΩ for a 1 state, and a maximum of 0.4 V with a current-sinking capability of 9 mA in the 0 state.

The BCD data (E11 through E78) from the storage flip-flops is applied to the buffer-circuit inverters, is complemented, and emerges as BCD data (D11 through D78), which is applied to the DATA OUTPUT socket, D-J1.

Print Command. A print command (PGT) is also available (paragraph 2.5.3) that is a buffered and inverted CG signal from the program circuit. PGT is 1 for display.

4.8 PROGRAM CIRCUIT (BOARD B).

4.8.1 General.

The program circuit generates the store signals used for the jam-transfer function, the reset signals used to control display time, and the print-command signal used to initiate external devices.

4.8.2 Store. (Figure 6-4.)

Clear. At the end of a measurement, CG goes to the 0 state. The negative transition associated with this change is fed through a differentiating network (B-C23, B-CR20) and a DTL inverter (B-IC5) into the input of a power gate (B-IC8). The output waveform, $\overline{CL}$, is a negative-going pulse, ≅2.5μs duration. The 0 state of $\overline{CL}$ clears the storage flip-flops in the register circuit of previous data.

Transfer. The transfer pulse (TR) is derived from CG output and is fed into a power gate (B-IC8) and through the STORAGE ON-OFF switch (B-S2B) to all the transfer gates in the display circuit. The 1 level of the TR pulse opens the transfer gates (TR1 at the register circuit) and the numbers accumulated in the count registers are transferred into the storage flip-flops. The 0 level of TR prevents any further changes in the counting register from affecting the storage flip-flops. TR1, is in 1 level during the display cycle and at 0 during reset and counting cycles.

Storage Disable. When the STORAGE ON - OFF switch (B-S2B) is depressed, the CL1 signal is set to the 0 state and TR1 is set to 1. The storage flip-flops continue to upgrade their contents to the contents in the counting register, since the transfer gates remain in the 1 state.

4.8.3 Display Time.

General. The display time is the time between measurements, from the time the main gate closes to the time the reset pulse occurs. This must be adjustable to allow observation of the visual register and to allow for operation of external devices, such as printers and other pieces of data-handling equipment. In the non-storage mode, the display time is the only time that the measurement data can be observed in the visual register.

Circuit Operation. At the end of a measurement, the CG signal goes to 0, which causes the TR signal to assume the 1 state and initiate the display timing circuit (Figure 4-2). This turns off B-Q20 and capacitor B-C25 charges towards +15 V, at a rate determined by the DISPLAY time control potentiometer. When B-C25 has reached ≈+10 V, B-Q21, B-Q23 and B-Q22 turn on, producing a reset pulse that is inverted through B-IC5 to give $\overline{RE}$. Capacitor B-C25 discharges towards ground through B-Q20 and when the capacitor voltage gets down to ≈+4 V, the reset pulse ($\overline{RE}$) turns off. The width of the reset pulse is ≈900 μs and the charging time of the capacitor can be varied from 10 ms to greater than 10 s. The HOLD position of the DISPLAY switch produces an infinite display time.

Manual Reset. When the manual RESET button is pushed, a reset pulse is produced with a duration equal to the time the button is depressed. This is accomplished by causing $\overline{RM}$ to be zero (ground), thus, turning on B-Q23 and B-IC5 to produce a reset pulse ($\overline{RE}$). Simultaneously, a clear pulse ($\overline{CL}$) is applied to the storage flip-flops, generated by the manual-reset button.

A reset pulse will also be generated when any of the measurement mode pushbuttons are released. The pulse will reset everything in the counter except the storage flip-flops. Thus, when going from the FREQUENCY mode to PERIOD 0.1 μs mode, for example, the old data is erased when a reset pulse, $\overline{RE}$, is generated. Assuming the counter is in the FREQUENCY mode, as the PERIOD 0.1 μs pushbutton is depressed, the FREQUENCY pushbutton becomes unlatched. The unlatching causes signal RA1 to become ungrounded, turning on B-Q31, and changing $\overline{RA1}$ from the 1 to the 0 state. The negative transition of $\overline{RA1}$ makes the base of B-Q23 go to the 0 state, turning on B-Q23. When B-Q23 goes on, a 1 state appears at the B-IC5 input, causing a negative-going $\overline{RE}$ signal, the reset pulse. The reset-pulse duration will be the charging time of B-C26 (9.4 kΩ X 1 μF) ≈10 ms, or the time that it takes to latch the PERIOD 0.1 μs pushbutton (grounding DS2, thus turning on B-Q31 and raising $\overline{RA1}$ to the 1 state), whichever is shorter.

The advantage of this system is that the first measurement made in the new mode will be a meaningful answer. This is especially important when going to the COUNT mode, since meaningful measurements should start when the COUNT button is depressed. When operating the COUNT button, no reset pulse is produced, therefore, successive counts can be added, if the DISPLAY switch is in HOLD. A reset pulse is generated if only the RESET button is depressed when the DISPLAY switch is in HOLD. If the DISPLAY switch is not in the HOLD position, a reset pulse will occur after the display time has elapsed. However, if the COUNT button is again depressed before the elapsed display time the second count will add to the first and the counter is totalizing.

4.9 MEASUREMENT MODES. (Figures 6-3/6-4/6-9.)

4.9.1 General.

The type of measurement to be made is determined by six pushbuttons on the front panel. The buttons are labelled FREQUENCY, PERIOD OR TIME INTERVAL (0.1 μs, 1 μs or 10 μs), RATIO (A/B) and COUNT (START-STOP). These pushbuttons set up the program and they also energize the unit lamps in the visual display.

4.9.2 Count.

In the count mode, no decimal points or units are displayed.

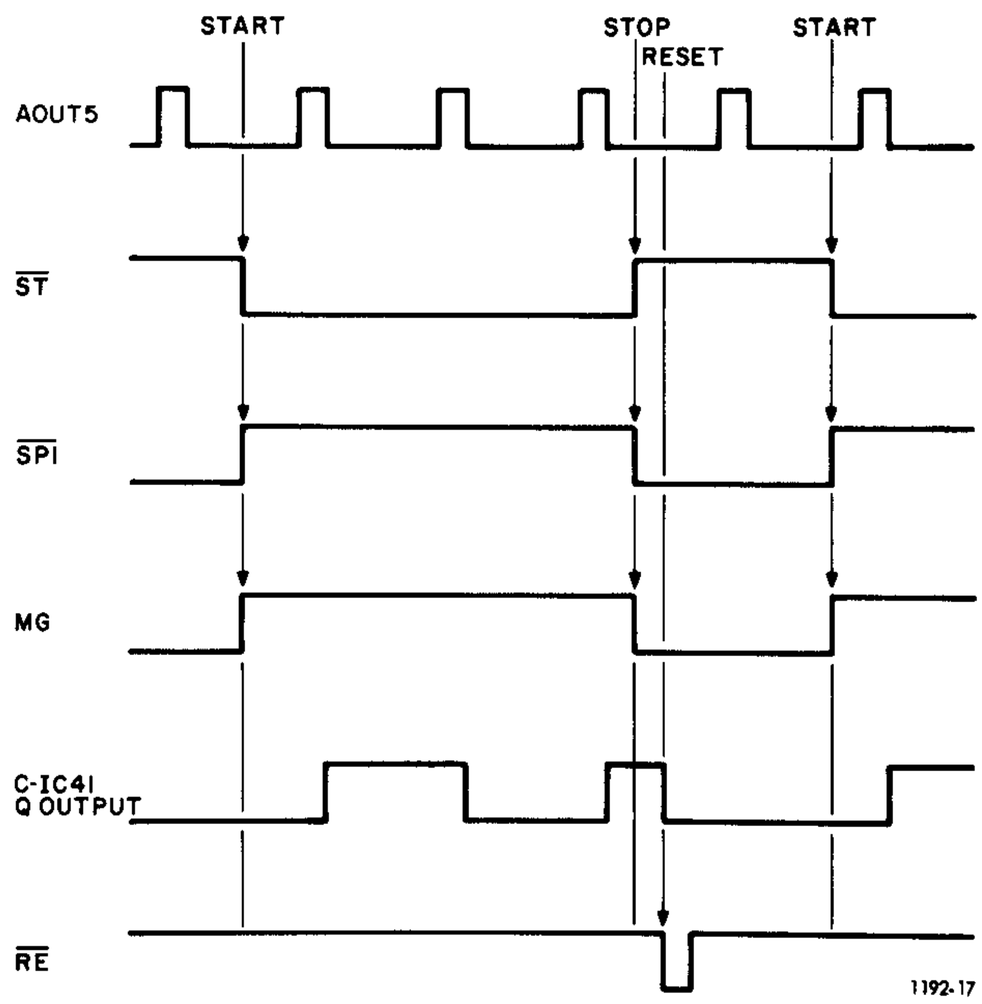

Figure 4-7. Count mode timing diagram.

Quiescent. With any measurement button except COUNT latched, the $\overline{RA1}$ signal is high. As the COUNT button is depressed, the latched button unlatches, causing $\overline{RA1}$ to go low and energizing the COUNT-button functions. At the same time, $\overline{RE}$ goes to the 0 state, resetting the whole counter, except the storage registers. This ensures a correct first reading when the count mode is used.

Start. When the count button is depressed (START, Figure 4-7), $\overline{ST}$ goes to 0 and the main-gate output signal (MG) goes to 1 (gate open). At this point, the counting decades start counting the INPUT A signal AOUT5. The counting lamp also comes on, to indicate that a measurement is being taken.

Stop. When the COUNT button is released, $\overline{SP1}$ goes to 0 and the main gate is turned off. This stops the count and generates the transfer and clear pulses, transfering the counted result into the storage flip-flops for visual display. The visual display will remain for the duration set with the DISPLAY switch. Thus, if a count from zero is desired on the next count, wait for the DISPLAY time to elapse or push the RESET button. However, if it is desired to totalize the count (i.e., add one measurement to the other), set the DISPLAY switch to HOLD. This will prevent a reset pulse from being generated, except when the RESET button is pushed.

4.9.3 Frequency.

Quiescent. In the FREQUENCY mode, decimal points D1, D2, D3 and D4 (Table 3-2) are used. These, along with the proper unit that is displayed in the window to the right of the digits, are selected by the position of the range switch. When the FREQUENCY pushbutton is depressed, the circuits are interconnected as shown in Figure 4-8. The GATE TIME (range) switch can be set for gate times between 100 μs and 10s. The illustration shows a 1-ms setting.

Start. At the end of the display time, or by manually depressing the RESET button, a reset pulse, $\overline{RE}$, (Figure 4-9) is produced that sets the count gate flip-flop to Q, opens the count gate to allow GTOUT1 pulses to be fed into the time-base dividers, sets the counting decades to 0, sets the main gate flip-flop to $\overline{Q}$, and sets the time-base dividers to 9. The first GTOUT1 pulse, which comes through the count gate into the time-base dividers after the reset pulse has terminated, sets the time-base dividers to 0, flipping the main-gate flip-flop to the Q state, thus starting the

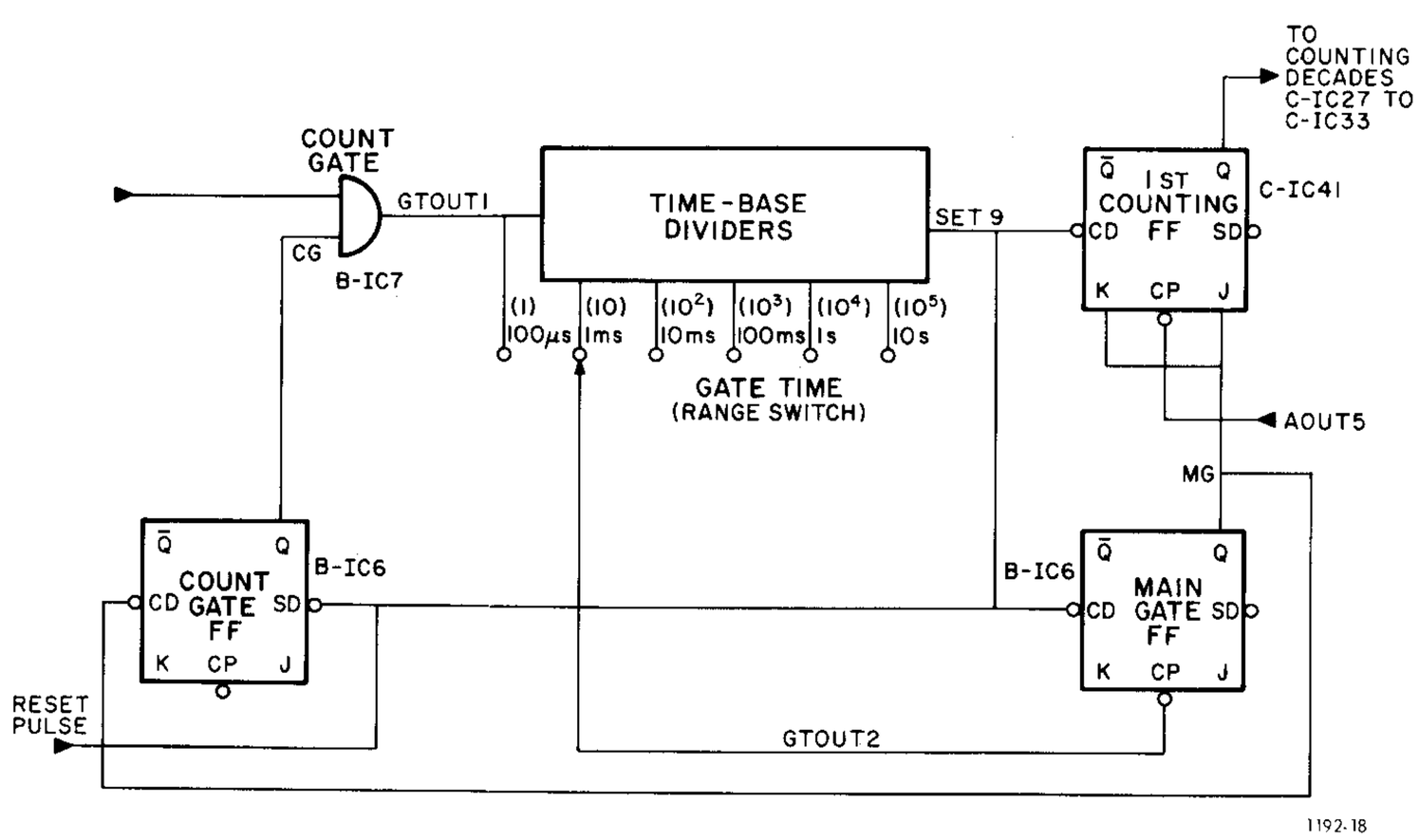

Figure 4-8. Block diagram.

measurement and allowing the first counting flip-flop to change state in accordance with the input signals from the INPUT A circuit (AOUT5). The output of the first counting flip-flop is fed into the rest of the counting registers.

The TIN1 input signal is a 10-kHz signal (100 μs), derived from the time base oscillator by the internal clock divider that is counted in the time-base dividers.

Stop. When the first divider goes back to 0 (this is only for the 1-ms gate time), the main-gate flip-flop returns to the $\overline{Q}$ state. This prevents any more AOUT5 pulses from being counted and sets the count gate flip-flop to $\overline{Q}$, preventing any more clock pulses (GTOUT1) from entering the time-base dividers. This terminates the measurement.

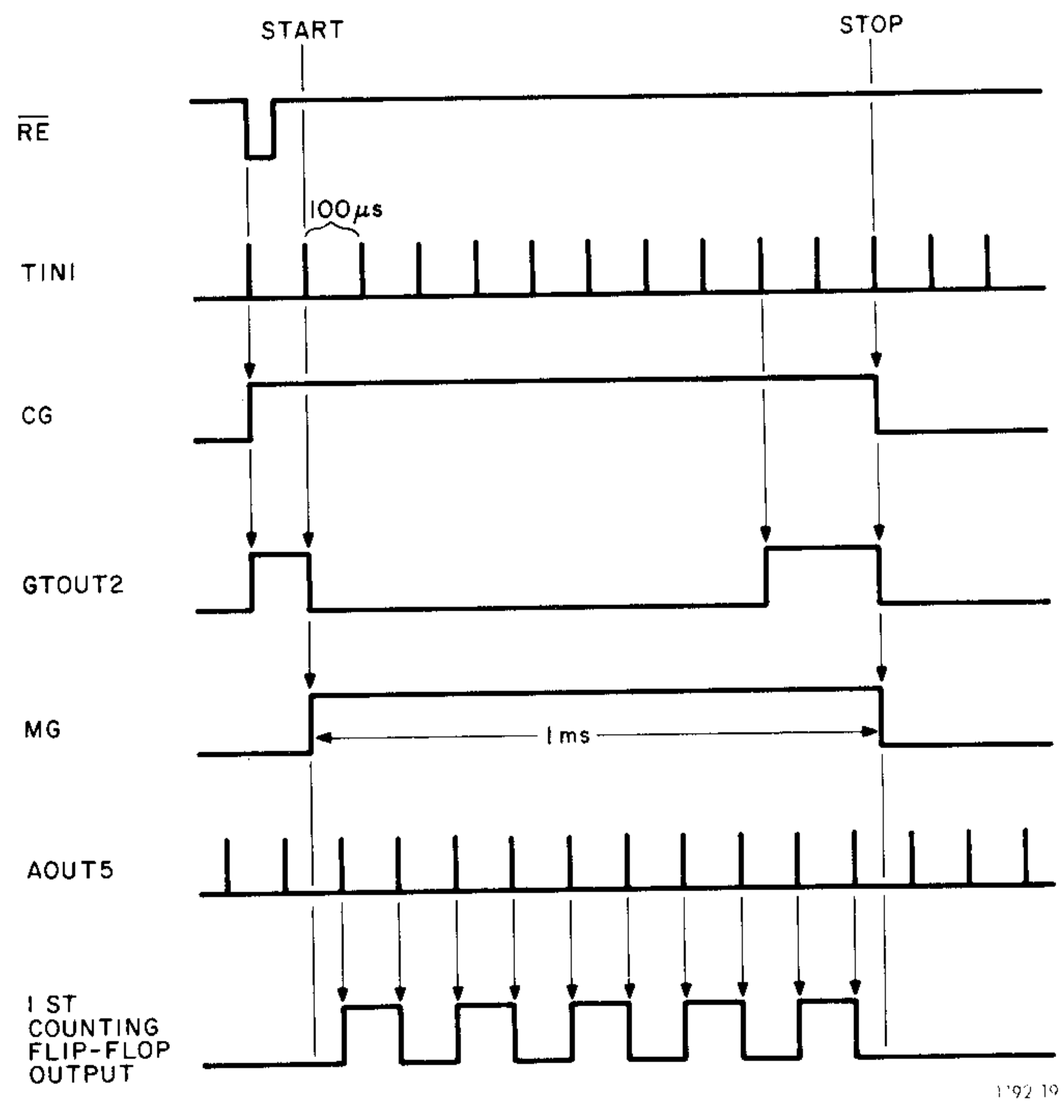

Figure 4-9. Frequency-mode timing diagram.

4.9.4 Period (Figures 4-8/4-10.)

The A input is used to stop and start the counter while the internal clock frequency (10 MHz, 1 MHz, or 100 kHz) is being counted. The period time interval button can be locked at .01 μs, 1 μs or 10 μs and the range switch set from 1 period to 10^5 periods. When a reset pulse arrives from the reset circuits, it sets all the counting decades to 0 and the time-base decade dividers to 9. The main-gate flip flop is set to $\overline{Q}$ and the count-gate flip flop to Q.

The first pulse coming from the input circuit, AOUT, is applied, as TIN1, through the pulse-forming network and the open count gate (IC7), to the time-base decade-divider chain, setting the time-base dividers to 0. This output (GTOUT2) is brought back into the main-gate flip flop, IC6, which is set to the Q position. Thus, signal MG goes to Q, allowing the counting flip flop, IC41, and the counting decades to count the time-base signal, be it 10 MHz, 1 MHz or 100 kHz.

Further pulses coming from the input A circuit (AOUT) are applied to the time-base decade divider and, if the range switch is set to 10 periods, the 10th pulse after the start pulse sets the main-gate flip flop (IC6) to its $\overline{Q}$ position and also sets the count-gate flip flop to its $\overline{Q}$ position, turning off the count gate.

The number of periods counted is determined by the division rate of the time-base divider, which ranges from 1 to 10^5

4.9.5 Ratio A/B (Figure 4-11).

The ratio A/B mode is very similar to the frequency mode with the exception that the internal time-base is replaced with the B signal applied to the input B channel.

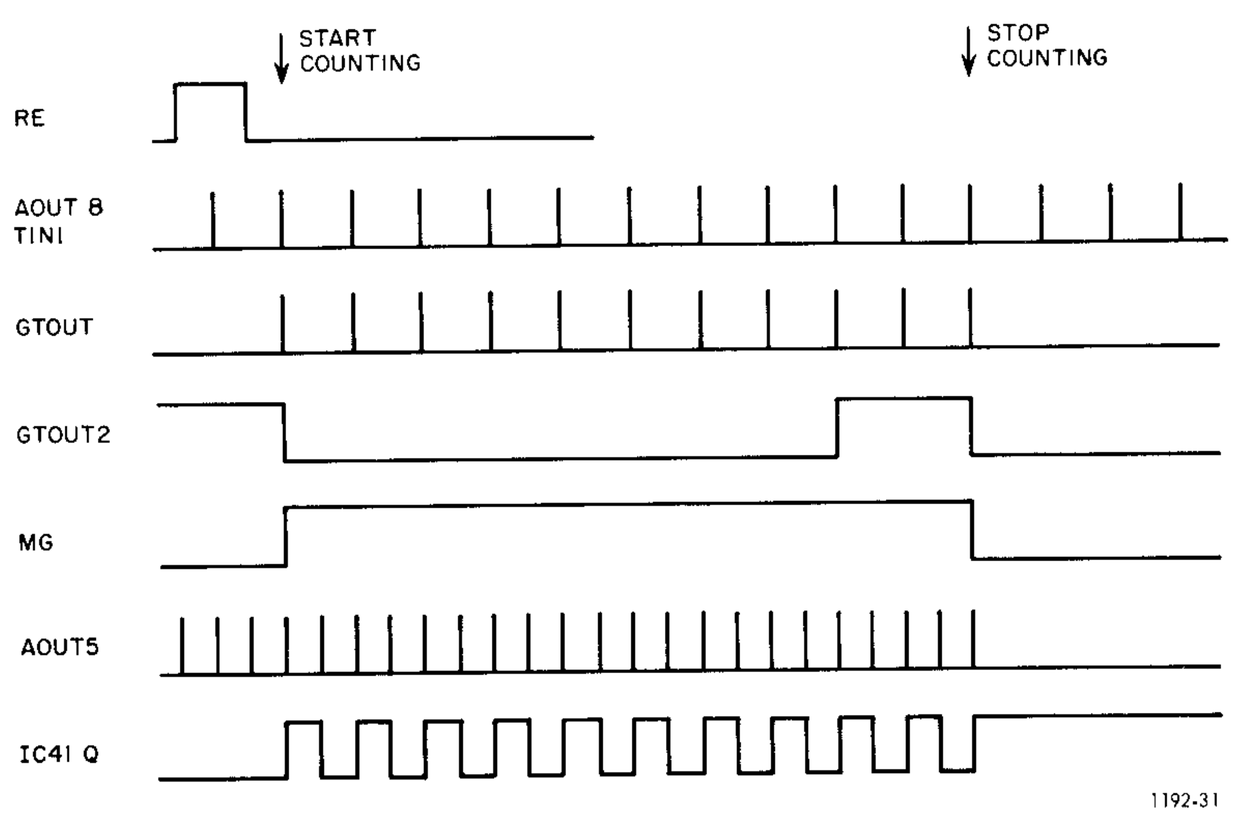

Figure 4-10. Period mode timing diagram.

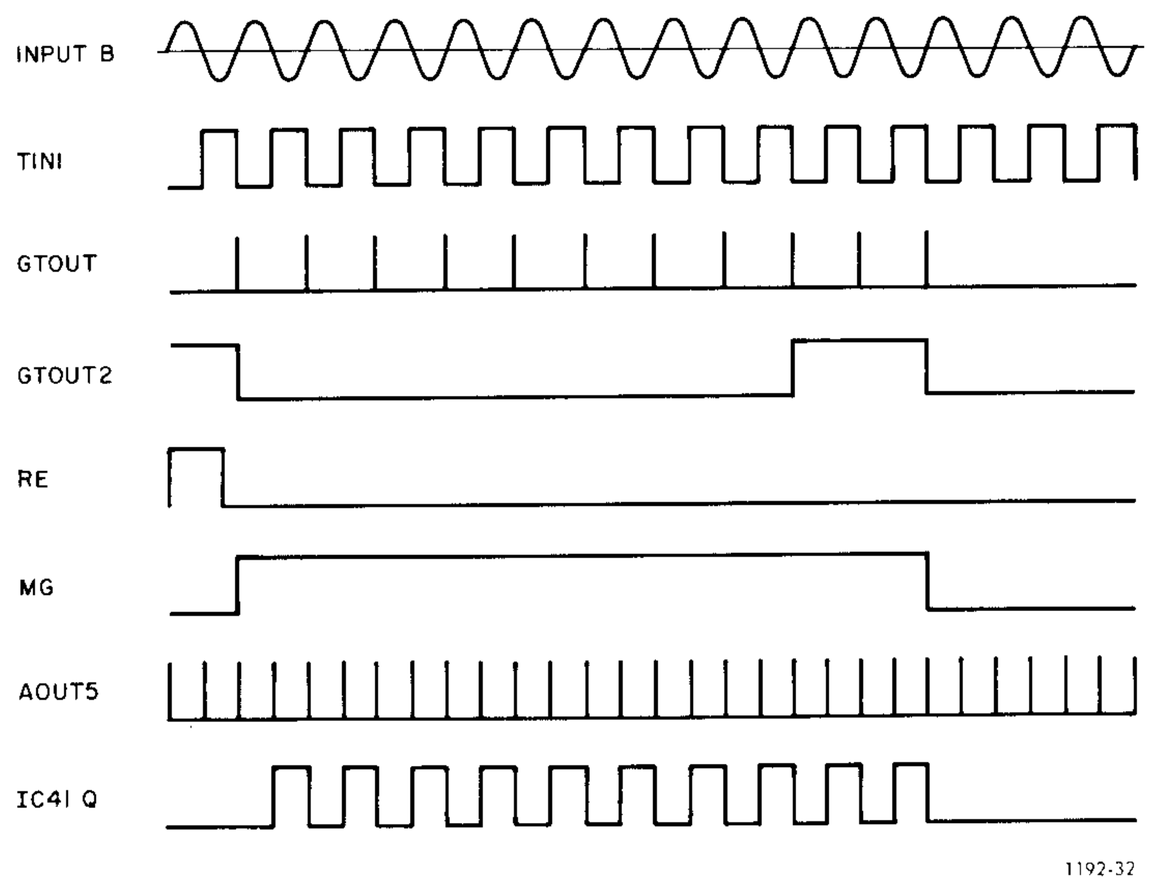

Figure 4-11. Ratio mode timing diagram.

The signal applied to input B, after being amplified (Q6), is put into a threshold device (Q7/Q8) for translation into pulses. When the RATIO button is depressed, this signal is routed as TIN1 through the count gate into the time-base decade dividers. The input A signal is applied as AOUT, and AOUT5 to IC41.

The reset pulse (RE) sets the counting decades to 0 and the time-base divider decades to 9. Simultaneously, the main-gate flip flop, IC6, is set to $\overline{Q}$ and the count gate flip flop to Q, opening the count gate. The first pulse of TIN1, after the reset pulse, that passes through the count gate as GTOUT1 sets the time-base dividers to 0, and opens the main gate, IC6, starting the counting of IC41 and the counting decades.

When an increment of 10^n pulses of GTOUT1, depending on the setting of range switch, has entered the time-base decade divider, GTOUT2 goes to 0, stopping the counting and preventing any more of the TIN1 signal from entering the time-base decade dividers.

4.9.6 Time Interval (Figure 4-12).

The time interval between two start and stop pulses, or duration of the start pulse, is measured by counting the 10-MHz, 1-MHz, or 100-kHz internal time-base frequencies, depending on which of the time interval push-buttons is pushed. The reset pulse terminating the display time sets the main-gate flip-flop to $\overline{Q}$. The negative pulse applied to the start input sets the main-gate flip-flop (IC6) to Q, opening the main gate and letting IC41, and the decade dividers, count the AOUT5 signal derived from input A.

The negative pulse at the stop terminal stops the counting by setting the main-gate and count-gate flip flops to $\overline{Q}$. If the next start pulse arrives before the reset pulse, the start pulse also sets the count gate to Q. This prevents a reset pulse from ever being produced, so that the counter now totalizes the events in the counting decades.

The time duration of the start pulse can also be measured by permanently setting $\overline{SP}$ low. Then, as long as the START input (or $\overline{ST}$) is low, the counter is counting.

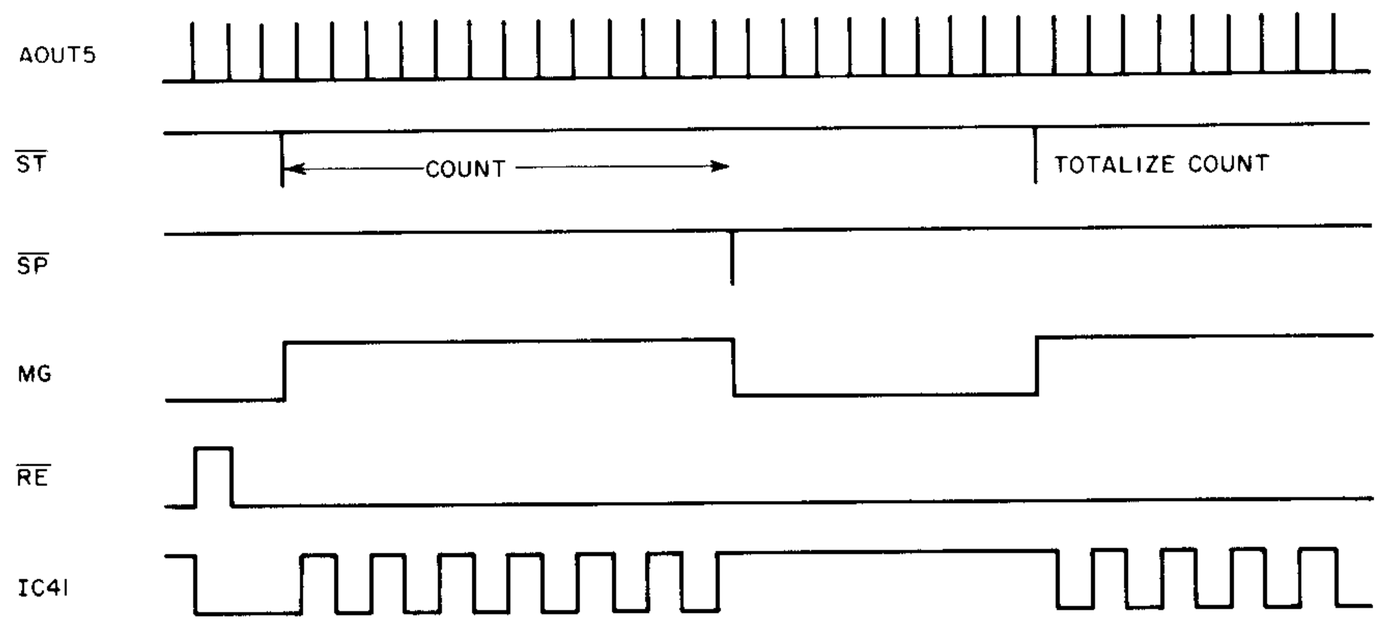

Figure 4-12. Time-interval mode timing diagram.

4.9.7 START AND STOP INPUT

The start and stop input is applied to the main gate flip-flop, IC6 and it in turn opens and closes the main gate. To energize the main gate, the start input must reach the low level, $V_1 \leqslant +0.3$ V. For the stop input to turn off the main gate, it must approach the low level $V_1 \leqslant +0.3$ V. For both start and stop inputs, the external circuitry must be able to sink 6 ma. If the start input is not terminated when the stop input is applied, the start input overrides the stop input and, if both are applied simultaneously, the main gate turns on at the beginning of the start input and off at its termination.

For the signals to be terminated, the input must be high $V_2 \geqslant +2$ V. The inputs have an internal 4.7-kΩ pull-up resistor to +5-V, thus no current capability is necessary. The input operates without any further complication, with relay contact-closures-to-ground, NPN-transistor-to-ground, or integrated-circuit switching.

However, for pulse and dc level inputs outside the range $V_1 \leqslant -0.7$ V and $V_2 \geqslant +5.7$ V, an internal limiting circuit becomes operative. It is a 50-Ω 1-W series resistor with diodes, connected to +5.0 V and ground. The maximum input is limited by the power dissipation of the 50-Ω resistor. Dc level inputs lasting in excess of 5 s must stay within the range $V_2 \leqslant +12.7$ V and $V_1 \geqslant -7.7$ V.

For narrow pulses, the average power dissipation must be < 1 W in the 50-Ω resistor. Details covering special operating problems associated with this circuitry are given in paragraph 3.13.

Blank Page

Service and Maintenance—Section 5

5.1 GR FIELD SERVICE 5-1
5.2 INSTANT RETURN 5-1
5.3 MINIMUM PERFORMANCE STANDARDS 5-1
5.4 TROUBLE ANALYSIS 5-3
5.5 REPAIRS 5-6

5.1 GR FIELD SERVICE.

The two-year warranty attests the quality of materials and workmanship in our products. When difficulties do occur, our service engineers will assist in any way possible. If the difficulty cannot be eliminated by use of the following service instructions, please write or phone our Service Department (see last page of manual), giving full information of the trouble and of steps taken to remedy it. Be sure to mention the serial, ID, and type numbers of the instrument.

5.2 INSTRUMENT RETURN.

Before returning an instrument to General Radio for service, please contact our Service Department or nearest District Office requesting a "Returned Material" number. Use of this number will ensure proper handling and identification. For instruments not covered by the warranty, a purchase order should be forwarded to avoid unnecessary delay.

5.3 MINIMUM PERFORMANCE STANDARDS.

5.3.1 General.

The following checks are designed to verify counter operation in a quantitative way. They supplement the self-check procedures of paragraph 3.1. The procedure must be followed in the order given to provide a smooth checkout procedure. In the event of failure, consult paragraph 5.4.

NOTE

The readouts are given in relation to a seven-digit counter. Some readings on a five or six-digit counter may cause the SPILL light to illuminate.

5.3.2 Internal Test.

The 100-kHz internal test can be performed as follows:

a. Apply power and depress the FREQUENCY and 100 kHz TEST buttons and check that all other pushbuttons, front and rear, are not depressed.

b. Set the GATE TIME to 10 s. Note that the "Hz" lamp is illuminated at the right-hand end of the display window.

c. Set the DISPLAY control to 1 s.

d. The digital indicators should indicate 100000.0 Hz after 10 s.

e. Rotate the GATE TIME control to 1 s, 100 ms, 10 ms, 1 ms, and 100 μs and note that the indicators read the equivalent of 100 kHz in each position (see Table 3-2). An on-scale indication for a six-digit counter will occur at 1 s; for a five-digit, at 100 ms.

5.3.3 Storage Mode.

When the rear-panel STORAGE switch is not depressed, the counter is in the storage mode. This was evident in paragraph 5.3.2, step g, when the digits remained stationary and didn't cycle from zero to nine during the 10-s 100-kHz measurement. Depress the STORAGE switch and set the GATE TIME to 10 s. Note that the digits do cycle from zero to nine during a measurement and that the word COUNT illuminates at the left-hand end of the display window.

5.3.4 Display Time.

Check the display time as follows:

a. Set the range switch GATE TIME to 1 s and make sure the DISPLAY switch is still set to 1 s.

b. Observe that the display time is 1 s.

c. Rotate the DISPLAY switch to 10 s and observe that the display time is approximately 10 s.

d. Rotate the DISPLAY switch to the 10-ms position and observe a barely perceptible display time, approximately 10 ms.

e. Rotate the DISPLAY switch to the HOLD position. Observe that the count holds in the display tubes.

5.3.5 Reset.

To check the reset circuit, unlatch the 100 kHz TEST pushbutton by depressing and releasing it. Push the RESET button on the front panel and note that all the digits read zero and that the COUNT lamp is extinguished.

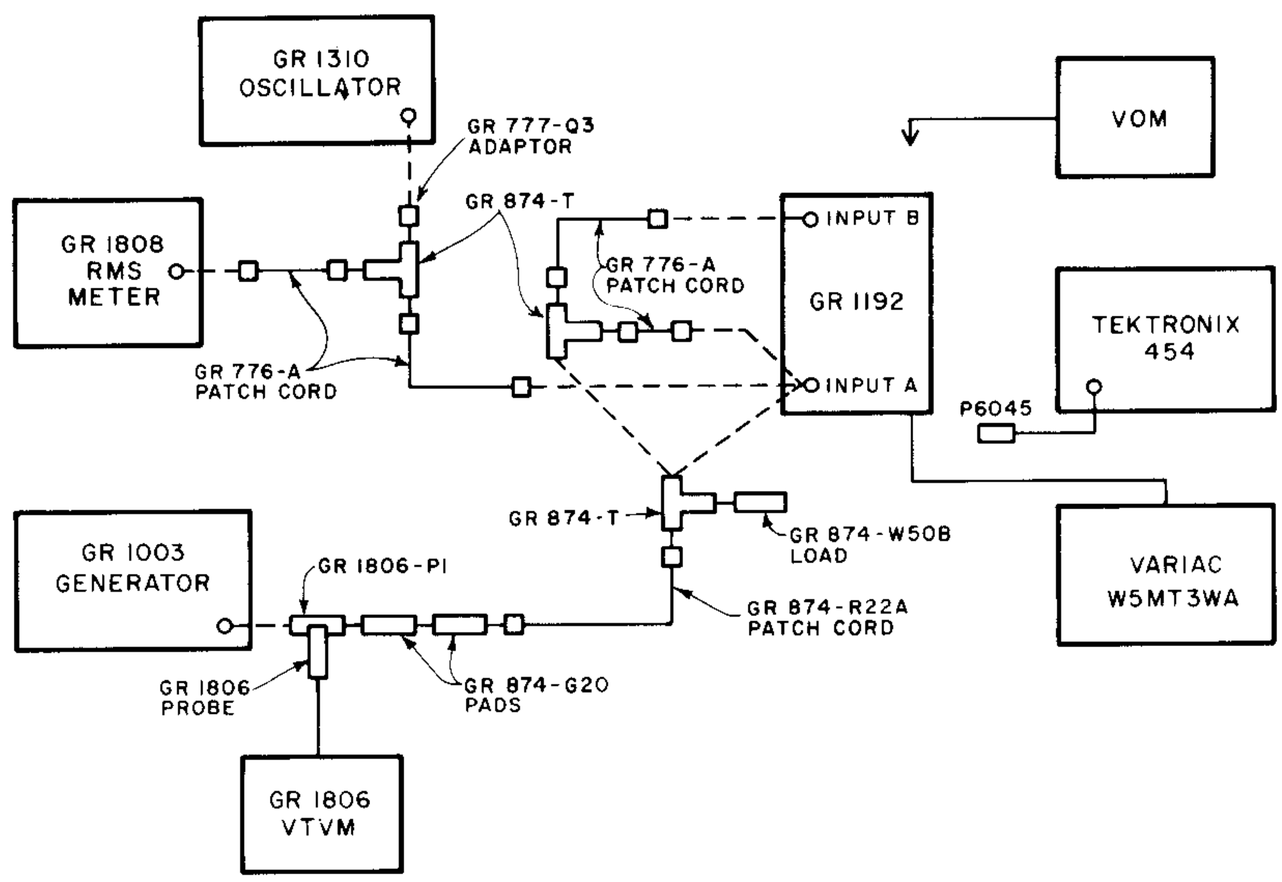

Figure 5-1. Test setup.

5.3.6 Frequency Measurement.

To check the frequency operation, proceed as follows:

a. Set the DISPLAY switch to 1 s and retain the 1192 settings of paragraph 5.3.2.

b. Connect the 1310 to INPUT A as shown in Figure 5-1.

c. Set the 1310 FREQUENCY to 1 kHz and set the output to read 10 mV rms, as observed on the 1808 voltmeter.

d. Set the 1192 TRIGGER LEVEL control to the black line, depress the FREQUENCY button, and make sure the ATTENUATOR buttons are unlatched. The 1192 should count the 1 kHz to within ±1 count.

NOTE

Slight adjustment of the TRIGGER LEVEL control may be required to find the maximum sensitivity point.

e. Set the 1310 to 10 kHz, again at 10 mV, and observe that the 1192 counts the 10 kHz to within ±1 count. Disconnect the 1310 from the counter.

f. Connect the 1003 signal generator to the 1192; both 20-dB pads should be in the circuit. Set the frequency of the 1003 to 1 MHz and the OUTPUT to 1 V rms, as monitored on the 1806 meter. The counter should read 1 MHz ±1 count.

g. Set the frequency to 20 MHz same level; the 1192 should read 20 MHz ±1 count.

h. Increase the OUTPUT of the 1003 to 2 V, rms, and set the frequency to 32 MHz. The counter should read 32 MHz ±1 count.

5.3.7 Ratio Measurement.

To check the ratio operation, proceed as follows:

a. Depress the RATIO button (the FREQUENCY button will automatically unlatch).

b. Set the 1192 GATE TIME switch to 10 ms.

c. Connect a second 874-T to the original tee and thence to the B-INPUT jack at the rear of the 1192, via a GR 776-A patch cord, as shown in Figure 5-1.

d. Attach the other end to the A-INPUT jack and set the output of the 1310 to 100 mV.

e. Set the frequency of the 1310 to 400 Hz; the 1192 should display 0000100 ±1 count.

f. Maintain the 100-mV level and set the frequency of the 1310 to 100 kHz; the 1192 should again display 000100 ±1 count.

g. Replace the 1310 with the 1003 signal generator.

h. Remove one 20-dB pad from the circuit shown in Figure 5-1 and connect the generator to one leg of the second coaxial tee that goes to INPUT A and B on the 1192.

i. Set the frequency to 10 MHz and the output to 100 mV.

j. Observe that the 1192 displays 000100 ±1 count.

5.3.8 Data Output.

For counters with the optional data output, the output levels can be checked with the general-purpose VOM.

Proceed as follows:

a. With no signal connected to the counter, measure each pin of the DATA OUTPUT socket with a D prefix (data line) to be 0 V (Figure 2-3). RESET depressed.

b. Connect the 1310 oscillator to the INPUT A jack.

c. Set the oscillator 888XXX Hz and measure the 8-bit lines (D18, etc.) to be +5 V and all 1-, 2- and 4-bit lines (D11, D12, D14, etc.) to be 0 V. (Table 2-2.)

d. Set the oscillator to all sevens and measure the data lines. The 1-, 2- and 4-bit lines should read +5 V; the 8-bit lines should read 0 V. This checks each line in both of its states.

e. Monitor pin 25 for +5 V, in all cases.

f. Check that pin 50 is connected to chassis ground in all cases.

g. Ascertain that pin 24 (PGT) is high (+5 V) during the display time and then depress the COUNT BUTTON and check that pin 24 is low (0 V) during the measurement time.

5.3.9 Lock-Range Check.

a. Set the 1192 to the frequency mode and set the gate time to 1 s. Inject a signal ⩾ 100 mV rms from the 1003 into the input-A channel.

b. Adjust the 1003 for a reading on the 1192 of 1.000,000 MHz ±1 count.

c. Unlatch the external time-base button (to the 1 MHz position). Apply the signal from the 1003 also to the input B channel. See Figure 5-1 for interconnection details.

d. Slowly increase the vernier frequency on the 1003 until the 1192 reading differs by ±1 count.

e. Remove the input to the B channel and the counter reading should be ⩾1.000010 MHz. Repeat step d for a vernier-frequency adjustment in the opposite direction and counter should read ⩽0.999990 MHz.

f. Latch the external time-base button to 100 kHz and set the gate time for 10 s. Repeat steps b through d for 100 kHz and read 100,000.0 Hz ±1 Hz.

5.4 TROUBLE ANALYSIS

5.4.1 General

If unable to obtain the performance called for in the minimum performance procedures of paragraph 5.3,use the procedures that follow to isolate trouble to a replaceable detail part. Refer to Figure 5-1 for test-equipment connection and to Table 5-1 for suggested test equipment. Full circuit details and parts information, given in Section 6, used in conjunction with the circuit theory presented in Section 4,should facilitate repair.

5.4.2 Initial Procedures.

a. Release the two captive screws at the rear of the instrument and slide the counter out of its case.

b. Prepare a test set-up as shown in Figure 5-1.

c. Refer to Figures 5-3 and 5-4 to locate test points and secondary adjustments.

5.4.3 Power-Supply Checks (Figure 6-6).

a. With the Variac off and the INCREASE control ccw, connect the power cable from the 1192 to the Variac and turn the power switches on.

b. Gradually increase the voltage to 115 V, while monitoring the wattmeter to see that power does not exceed 22 W.

c. Measure the +5 V regulated supply; if necessary, adjust R-R37 to get exactly 5.0 V (Figure 5-3).

d. Measure the +15-V and -15-V supplies; they should read +15 ±0.5 V and -15 ±0.5 V.

e. Swing the line voltage between 100 V and 125 V. Observe that the regulator circuits of the +5, +15, and the -15 V supplies hold within ±0.2 V.

5.4.4 Oscillator Checks (Figure 6-7).

a. Remove the Data Output board (if the instrument is equipped with this option). Refer to paragraph 5.5.3.

b. Connect Channel 1 of the oscilloscope to the output of the crystal oscillator (B-R12, to ground) and depress the 1192 RATIO button.

c. Set the time base on the oscilloscope to 0.1 μs/div.

d. Look for ≈ 2 V at 10 MHz.

e. If necessary, adjust B-L2 for maximum amplitude.

NOTE

Typical internal time-base signal waveforms are shown in the left-hand column of Figure 5-2.

5.4.5 Clock-Divider Checks.

a. Depress the 1192 FREQUENCY button.

b. Connect the oscilloscope to pin 14 of IC1 (TB1) and observe a 10-MHz pulse.

c. Move the oscilloscope to Pin 11 of IC1, Pin 11 of IC2, and Pin 11 of IC3, to observe 1-MHz, 100-kHz and 10-kHz pulses, respectively. These outputs should have a 20% duty ratio.

5.4.6 Internal Control Signals.

To verify proper operation of internal control signals in the counter, a check of waveforms shown in the appropriate schematic diagrams in Section 6 is recommended. Detailed waveforms of typical control signals that display more irregular shapes are shown in center column of Figure 5-2.

5.4.7 Trigger-Level Adjustment.

a. Latch the FREQUENCY mode push button, set the GATE TIME switch to 100 ms, and unlatch both attenuator buttons.

b. Connect an input signal of 100 kHz to input A, from the 1310 oscillator, at 100 mV rms as measured on the 1808 meter.

c. Set the trigger-level control on the front panel to the mid-range position (black line).

d. If necessary, adjust the B-R77 potentiometer with a small screwdriver until the counter reads 100 kHz.

e. Reduce the output of the 1310 while adjusting B-R77 to maintain the 100 kHz reading. The minimum signal at the optimum setting of B-R77 is ⩽ 10 mV.

5.4.8 Attenuator Checks.

To check the operation of the attenuators in the input circuit, proceed as follows:

a. With the 1192 in the FREQUENCY mode, apply a 10-kHz signal with the 1310 oscillator to INPUT A. See Figure 5-1 for the set up.

b. Set the output of the 1310 for 10 mV, as indicated on the 1808 voltmeter. With no attenuation in the 1192, a steady 10-kHz display should be seen.

c. Depress the 10:1 attenuation control on the 1192 and the display should be all zeroes.

d. Increase the output of the 1310, as observed on the

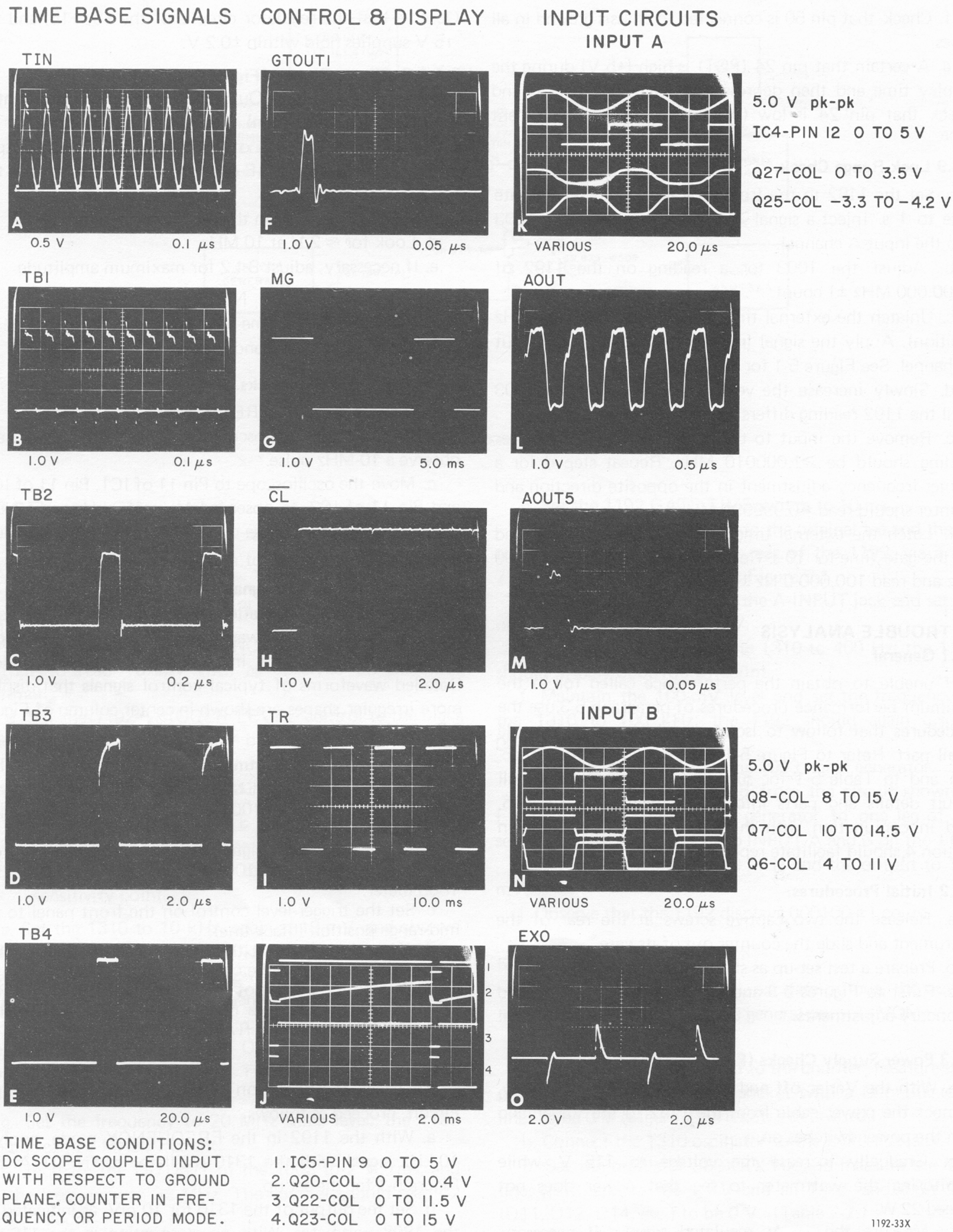

Figure 5-2. Selected waveforms typically found in a properly functioning 1192 counter.

Table 5-1
TEST EQUIPMENT

Function	Recommended Type*	Minimum Characteristics
RF Generator	GR 1003	67 kHz – 80 MHz; 1 ppm stability; 50Ω
Low Frequency Oscillator	GR 1310	2 Hz – 2 MHz, ± 2% accuracy; 600Ω
Metered Variac®	GR W5MT3W	300 W/150 V, full-scale, meters
Electronic Voltmeter (VTVM)	GR 1806 (with probe)	1.5 – 1500 V full-scale, ± 2% accuracy
Electronic Voltmeter Rf Tee	GR 1806-P1	20 Hz to 1.5 GHz; coaxial, 50Ω
Rms Voltmeter	GR 1808	10 Hz – 10 MHz; ± 1% accuracy full-scale
Oscilloscope (Dual Trace)	Tektronix 454 (P6045 probe)	Dc to 150 MHz
Coaxial Pad	GR 874-G20 (2)	50Ω; 20 ± 0.30 dB
VOM	Triplet 630 NA	Dc accuracy – ± 2%
Coaxial Tee	GR 874-T (2)	50Ω
Coaxial Load	GR 874-W50B	50Ω ± 0.5%
Patch Cord (Coaxial)	GR 776-A (4)	3/4-in. binding-post plug/BNC plug; 3 ft.
Adaptor (Coaxial)	GR 777-Q3	3/4-in. binding post to GR874®
Patch Cord	GR-874-R22A	GR874 connectors, 3 ft.

*Or equivalent

1808, to 100^{+100}_{-50} mV, at which time the counter should again display a steady 10-kHz reading.

e. Depress the attenuation controls on the counter for a 100:1 setting and the display should become all zeroes again.

f. Increase the output of the 1310 to $1.0^{+1}_{-0.5}$ V, and look for the counter to again display a steady 10-kHz reading.

5.4.9 A-Input Circuit (Figure 6-8).

To verify correct operation of the amplifier and wave-shaping stages in the INPUT A circuits:

a. Arrange the equipment as shown in Figure 5-1, using the 1310 oscillator as a 10-kHz source; use the oscilloscope to set the amplitude to 5.0 V pk-pk.

b. Set the 1192 controls for FREQUENCY mode, with TRIGGER LEVEL centered (display board removed).

c. Set the oscilloscope time base for 20 μs/div and synchronize it on the input signal.

d. Look for the waveforms shown in panel K of Figure 5-2, which are typical of properly functioning counter. Measurements are made with the X10 probe, from the test points indicated, with respect to ground.

e. To check higher-frequency operation, substitute the 1003 as the source (as shown in Figure 5-1 with both 20-dB pads).

f. Set the frequency to 10 MHz at 2.0 V (20 mV into 1192) and look for the waveform shown in panel L of Figure 5-2.

5.4.10 B-Input (Figure 6-7).

To verify proper operation of the amplifier and wave-shaping stages of the INPUT B circuits:

a. Arrange the equipment as shown in Figure 5-1, using the 1310 oscillator as a 10-kHz source; use the oscilloscope to set the amplitude to 5.0 V pk-pk.

b. Set the 1192 controls for the FREQUENCY mode, with the TRIGGER LEVEL centered. (display board removed).

c. Set the oscilloscope time base for 20 μs/div and synchronize it on the input signal.

d. Look for the waveforms shown in panel N of Figure 5-2, which are typical of a properly functioning counter. Measurements are made with the probe, from the test points indicated, with respect to ground.

e. If phase-lock is unsatisfactory, increase the input signal to 100 kHz (at an amplitude of 150 mV rms as

determined by the 1808 meter) and look for the waveform shown in panel O of Figure 5-2.

5.4.11 Count and Main Gate Flip-Flops.

a. Remove the display board from the 1192 and depress the FREQUENCY button.

b. Connect the VTVM to Pin 3 of IC6 and note that the VTVM reads ≈ 0 V.

c. Connect a jumper wire from chassis ground to Pin 13 IC5 (RE1) and note that the VTVM now reads ≈ 4.0 V.

d. Move the VTVM to Pin 15 of IC6 (MG) and read ≈ 0 V.

e. Connect a ground wire to START connector center conductor and now read ≈ 4.2 V. Remove the ground wire and push the COUNT button. Again read ≈ 4.2 V. Restore 1192 to FREQUENCY mode.

f. Move the VTVM to Pin 11 of IC6 (CG) and touch the ground wire to the STOP connector center conductor. The VTVM should read ≈ 0 V and remain there when the ground wire is removed. Repeat the above procedure using the START connector. The VTVM should read ≈ 3.8 V.

5.4.12 Display Circuit.

a. With the Display Board removed, set the 1192 controls for FREQUENCY mode, and 10-s display time.

b. Connect the VTVM to PIN 9 of IC5 (TR) and momentarily ground the STOP BNC connector center conductor. Read ≈ 5 V on the VTVM. Momentarily ground the START connector and read ≈ 0 V.

c. Move the VTVM to Pin 8 of IC5 and momentarily ground the STOP connector. Read ≈ 0 V. Momentarily ground START connector and read ≈ 0.6 V.

d. Move the VTVM to collector of Q20 and momentarily ground the STOP connector. The VTVM should take ≈ 10 s to reach 10 V and then settle back to 8 V. Momentarily ground the START connector and note that the VTVM quickly drops to ≈ 0 V.

e. Move the VTVM to Pin 10 of IC5 ($\overline{RE}$) and set the display time for 1 s. Momentarily ground the START connector. The VTVM should read ≈ 5 V. Momentarily ground the STOP connector and, after 1 s of delay (Display Time), the VTVM will change to 0 V.

5.4.13 Gated Time Base.

a. With the display board removed, connect the oscilloscope (X10 probe) to Pin 6 of IC7 (GTOUT1). Set the sweep time to 0.1 ms/cm.

b. Momentarily ground the STOP connector and observe 0 Vdc.

c. Momentarily ground the START connector and observe a pulse train with a 0.1-ms period. The pulse duration is ≈ 40 ns and its amplitude is ≈ 4 V.

5.4.14 Readout Circuits (Figure 6-11).

To verify operation of the readout circuits of the counter, proceed as follows:

a. Reinstall the display board in the counter. Place the 1192 in the COUNT mode and disable the storage functions.

b. Connect the 1310 oscillator to INPUT A and set it to 2 Hz.

c. Depress the 1192 RESET button and observe each digit in the right-most readout tube.

d. After the readout has cycled 0-9, increase the 1310's frequency by a factor of 10 and repeat steps c and d until all digits have been checked.

e. Set the 1192 in FREQUENCY mode with a 10-s gate time for store operation.

f. With the 1310 oscillator set at 777XXX Hz, inject the signal into the A INPUT connector, then switch the counter to STORE.

g. If the 3 most-significant digits display 7's, shorten the gate times to move the 7's display through the digits to the right. If the 7's display holds throughout, then the 1, 2, 4, binary paths of the display board are all functioning properly.

h. Reset the gate time to 10 s and reset the oscillator to 888XXX Hz. Repeat the previous procedures to verify operation of the binary-8 path in the display.

5.5 REPAIRS

5.5.1 Knob Removal.

To remove the knobs on the front-panel controls, either to replace one that has been damaged or to replace the associated control, proceed as follows:

a. Grasp the knob firmly with the fingers close to the panel and pull the knob straight away from the panel.

b. Observe the position of the setscrew in the bushing when the control is full ccw.

c. Release the setscrew and pull the bushing off the shaft. Use a 3/16-in. Allen wrench.

NOTE

To separate the bushing from the knob, if for any reason they should be combined off of the shaft, drive a machine tap a turn or two into the bushing to provide sufficient grip for easy separation.

5.5.2 Knob Installation.

To install a knob assembly on the control shaft:

a. Mount the bushing on the shaft, using a small slotted piece of wrapping paper as a shim for adequate panel clearance.

b. Orient the setscrew properly on the bushing, with respect to step b in paragraph 5.5.1, and lock the setscrew with a 3/16-in. Allen wrench.

NOTE

If the end of the shaft protrudes through the bushing, the knob cannot seat properly.

c. Place the knob on the bushing with the retention spring opposite the setscrew.

d. Push the knob in until it bottoms and pull it slightly, to check that the retention spring is seated in the groove in the bushing.

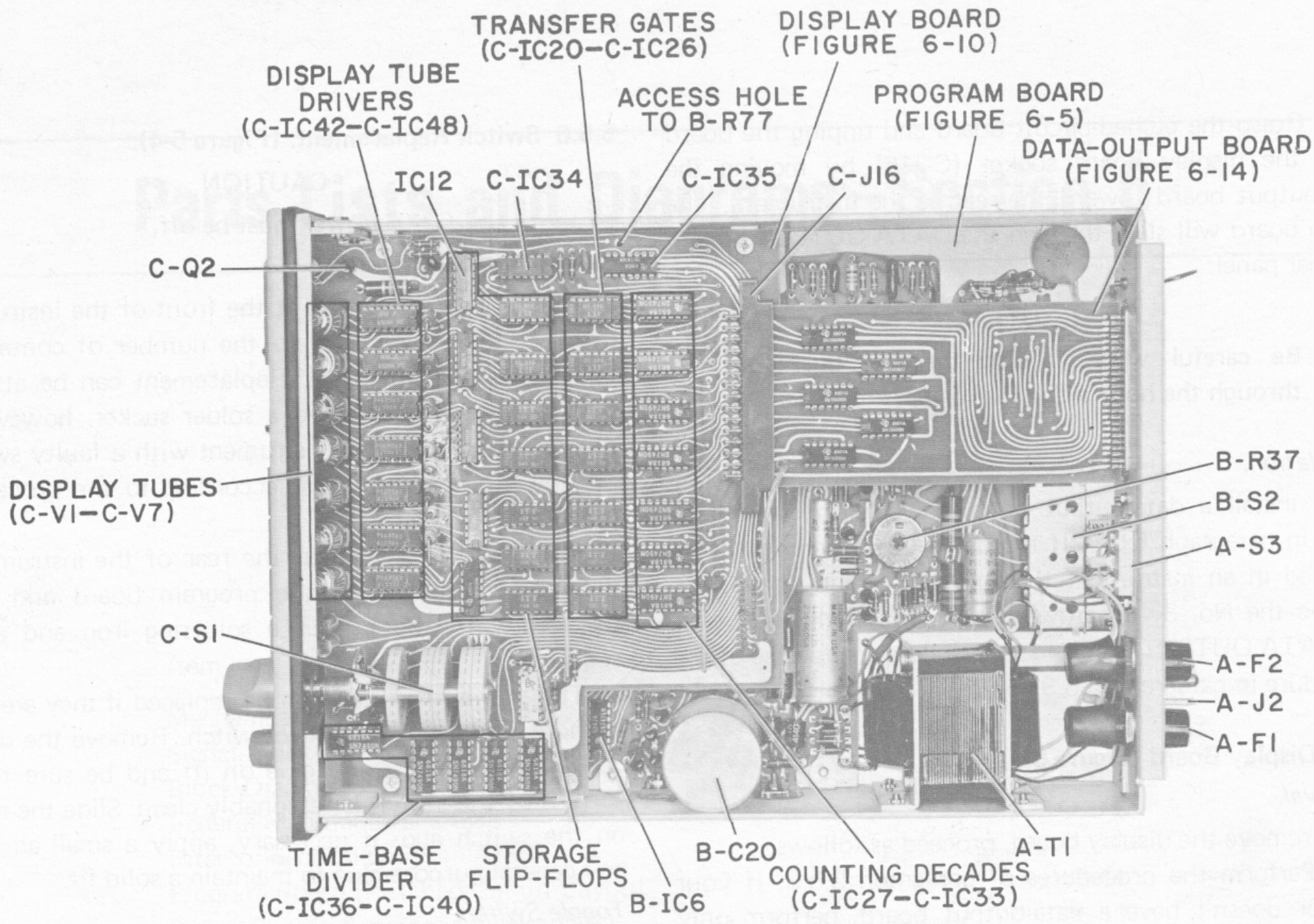

Figure 5-3. Top interior view of 1192 – all boards in place.

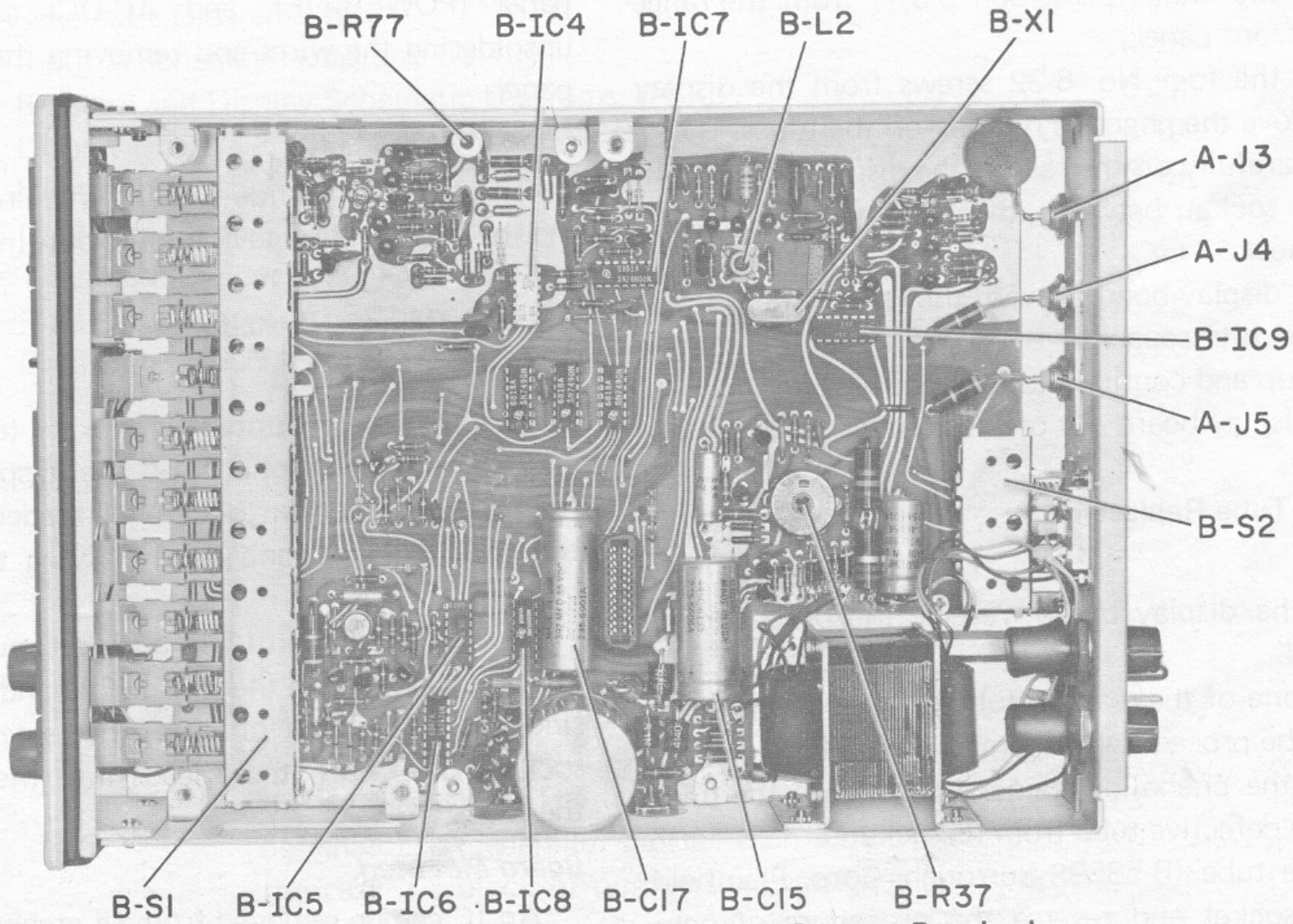

Figure 5-4. Top interior view of 1192 – Program Board only.

NOTE

If the retention spring in the knob is loose, reinstall it in the interior notch with the small slit in the inner diameter of the wall.

5.5.3 Data-Output Board.

Removal.

To remove the data-output board (optional) from the counter chassis, proceed as follows:

a. Remove the cabinet from the chassis.

b. Unplug the jumper wire from the data output board to the display board at the display board (Figure 5-3).

c. Remove the two No. 3-48, 5/16-in. screws, No. 3 lockwashers and No. 3-48 nuts from the DATA OUTPUT socket.

d. Grasp the etched-circuit board and unplug the board from the display board socket (C-J16) by moving the data-output board toward the rear of the instrument. The entire board will slide through the DATA OUTPUT hole in the rear panel.

CAUTION

Be careful when feeding the free bus wire through the hole in the rear panel.

Installation.

To install a data-output board, reverse the procedure given in paragraph 5.5.3. If the data-output board is being installed in an instrument that originally didn't have one, remove the No. 3-48 hardware from the blank plate over the DATA OUTPUT hole and then follow the reverse of the procedure in paragraph 5.5.3.

5.5.4 Display Board (Figure 5-3).

Removal.

To remove the display board, proceed as follows:

a. Perform the procedures of paragraph 5.5.3. If your counter doesn't have a data-output board, perform only step a of paragraph 5.5.3.

b. Remove the knob (paragraph 5.5.1) from the range switch on the front panel.

c. Remove the four No. 6-32 screws from the display board and remove the phenolic retainer on the tubes.

d. Lift up carefully on the rear of the display board until the plug and socket between the display and program boards disconnects.

e. Slide the display board toward the rear of the counter until the board hits capacitor B-C20. If the board catches anywhere, lift up and continue to move backwards.

f. Lift the display board out of the counter chassis.

5.5.5 Readout-Tube Replacement.

Installation.

To install the display board, reverse the procedure of paragraph 5.5.4.

To replace one of the readout tubes, proceed as follows:

a. Perform the procedures of paragraph 5.5.4.

b. Remove the phenolic retainer board from the tubes and remove the defective tube from its socke.

c. Install the tube (B-5859S Burroughs Corp.,Plainfield, N. J.) in the socket and reverse the procedure of paragraph 5.5.4.

NOTE

When installing a new tube, slide the pad almost to the ends of the leads before installing the tube in its socket. This procedure helps to line up the tube pins.

5.5.6 Switch Replacement. (Figure 5-4).

CAUTION

Power must be off.

Pushbutton Switches.

The 10-section switch at the front of the instrument is difficult to replace, due to the number of contacts that enter the program board. Replacement can be attempted with a soldering iron and a solder sucker; however, it is recommended that the instrument with a faulty switch be returned to General Radio according to the procedure of paragraphs 5.1 and 5.2.

The 2-section switch at the rear of the instrument has only 12 contacts into the program board and can be replaced with the use of a soldering iron and a solder sucker.

The pushbutton caps can be replaced if they are broken without replacing the entire switch. Remove the damaged cap (it may have some glue on it) and be sure that the surface of the switch is reasonably clean. Slide the new cap on the switch and, if necessary, apply a small amount of any general-purpose glue to maintain a solid fit.

Toggle Switch.

The two sub-miniature toggle switches on the front panel (POWER-OFF and AC-DC) can be replaced by unsoldering the wires and removing the nut from the front panel.

Slide Switch.

The power-line slide switch can be replaced by unsoldering the wires and removing the mounting hardware.

5.5.7 IC Removal/Installation.

Socket Mounted.

IC's that are mounted in sockets (drivers and the fifth and sixth digit sections of the display board) can be removed by insertion of a small-bladed screwdriver under the end of the IC and gently prying the IC up out of its socket.

When installing an IC in a socket, put all the leads from one side of the IC in the socket first and push the IC to that side until the leads on the other side line up with their socket holes. Push these leads into the socket and release the IC.

Board Mounted.

An IC can be removed from an etched-circuit board with a soldering iron and a solder sucker (such as a Soldapulit*). Clean the solder from each pin on the IC and remove the IC from the board.

Insert the new IC in the holes left by the old one, and solder each pin. Be careful not to burn the etched-circuit board.

*** Registered trademark of Edsyn, Inc., 15954 Arminta St., Van Nuys, California, 91406.**

Parts Lists and Diagrams—Section 6

Item	Page
Mechanical Parts	6-3
Signal Index	6-4
Block Diagram	6-7
Federal Manufacturer's List	6-8
Interconnection Diagram ABCD	6-9
Program Board B Etched-Circuit Layout	6-11
Power Supply Schematic Diagram, B1	6-11
Input B, Time-Base Oscillator, Phase-Lock Detector and Clock Divider Schematic Diagrams, B2	6-13
Input A Schematic Diagram, B3	6-15
Program and Display Schematic Diagrams, B4	6-17
Display Board C Etched-Circuit Layout	6-19
Digital and Visual Display Schematic Diagram, Part 1, C1	6-19
Digital and Visual Display Schematic Diagram, Part 2, C2	6-21
Time-Base Divider Schematic Diagram, C3	6-23
Data-Output Board D Etched-Circuit Layout	6-25
Data-Output Schematic Diagram, D	6-25

NOTE

Each reference designator used in our schematic diagrams and circuit descriptions now includes an initial letter, before a hyphen, to identify the subassembly. The numeric portion of each designator is generally shorter than would be the case if a block of numbers was assigned to each subassembly. A new designation WT (wire-tie point) replaces the customary AT (anchor terminal). The letter before the hyphen may be omitted only if clearly understood, as within a subassembly schematic diagram.

Examples: B-R8 = B board, resistor 8; D-WR2 = D board, wire-tie point 2, CR6 on the V schematic is a shortened form of V-CR6 = V board, diode 6. The instrument may contain A-R1, B-R1, C-R1, and D-R1, etc.

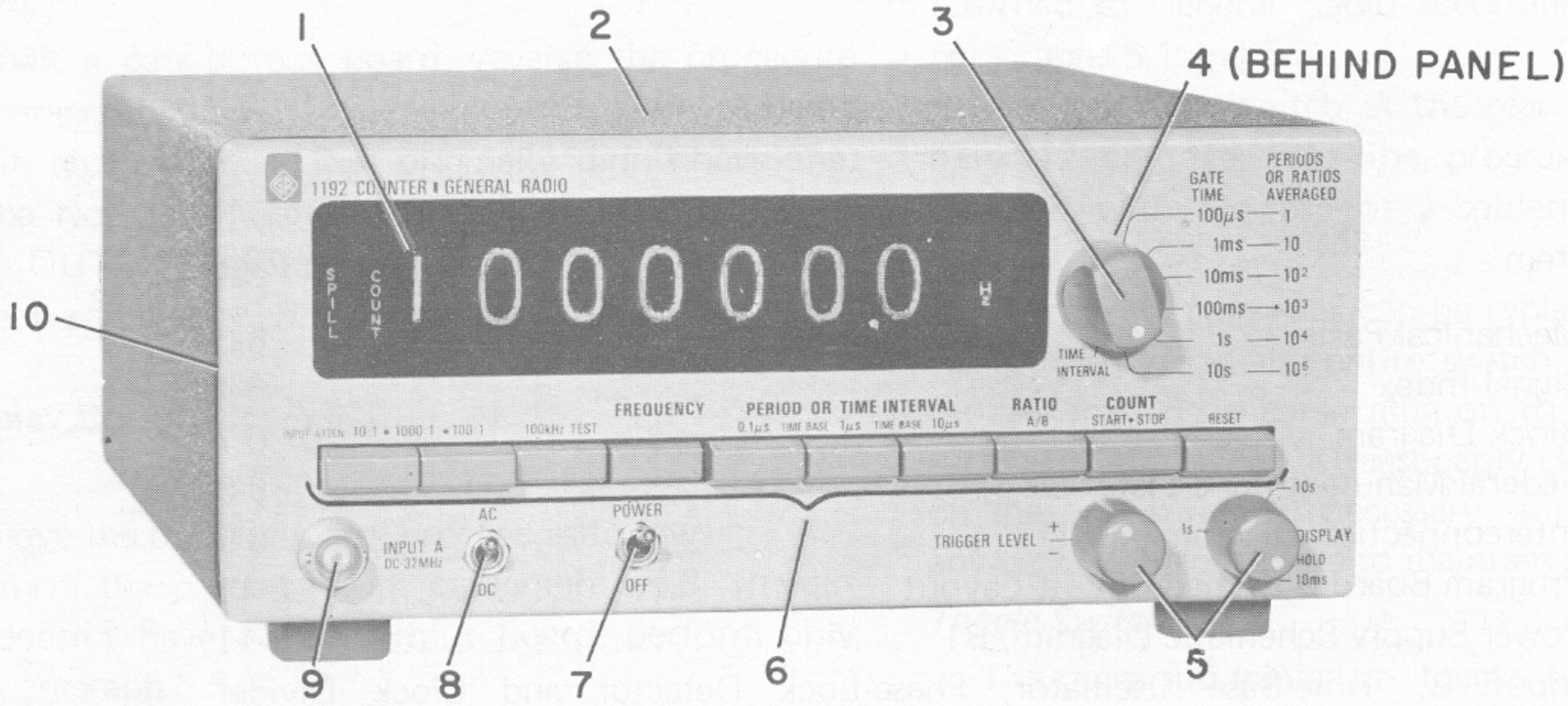

Figure 6-1. 1192 mechanical parts, front view.

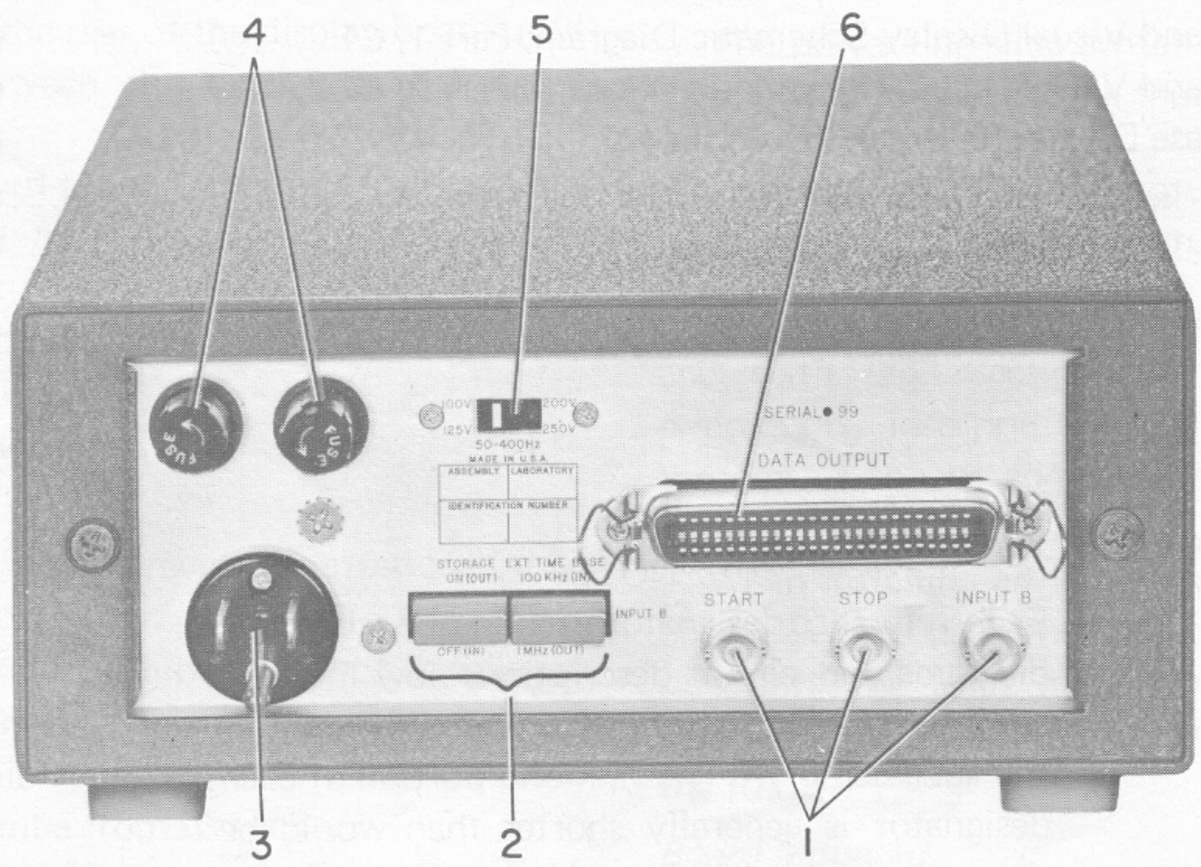

Figure 6-2. 1192 mechanical parts, rear view.

MECHANICAL PARTS LIST

Figure	Reference	Name	Description	GR Part No.	Fed Mfg Code	Mfg Part No.	Fed Stock No.
1	1	Window	Window, viaual register	1192-7001	24655	1192-7001	
1	2	Cabinet asm.	Cabinet asm.	4181-2528	24655	4181-2528	
1			Includes: Bail	5250-2123	24655	5250-2123	
2			Foot, soft, rear	5260-2060	24655	5260-2060	
1			Foot, rigid, right front	5250-2121	24655	5250-2121	
1			Foot, rigid, left front	5250-2120	24655	5250-2120	
1	3	Knob asm.	Knob, RANGE, including retainer 5220-5402	5520-5221	24655	5520-5221	
1	4	Dial asm.	Dial asm., RANGE (behind panel)	1192-1010	24655	1192-1010	
2	5	Knob asm.	Knob, DISPLAY and TRIGGER LEVEL including retainer 5220-5403	5520-5121	24655	5520-5121	
1	6	Switch	Pushbutton, multiple, switch B-S1	7880-1600	24655	7880-1600	
			Plastic pushbutton only	1192-5989	24655	1192-5989	
1	7	Switch	2-position toggle switch, POWER OFF, A-S1	7910-0791	95146	MST-205N	
1	8	Switch	2-position toggle switch, AC-DC, A-S2	7910-0790	95146	MST-105D	
1	9	Socket	Connector, INPUT, A-J1	4230-2301	09408	UG-1094/U	
1	10	Gasket	Rubber gasket	5331-3086	24655	5331-3086	
REAR PANEL							
3	1	Socket	Connector, A-J3, INPUT B; A-J4 STOP; A-J5, START	4230-2300	81349	UG-1094/U	5935-853-7596
1	2	Switch	Pushbutton, multiple switch, B-S2	7880-1610	24655	7880-1610	
			Pushbutton only	1192-5989	24655	1192-5989	
1	3	Plug	Power plug, 3-wire, A-J2	4240-0600	24655	4240-0600	5935-816-0254
2	4	Fuseholder	Fuse mounting device	5650-0100	71400	HKP-H	5920-284-7144
1	5	Switch	Slide switch, LINE VOLTAGE SELECTOR, A-S3	7910-0831	42190	4603	
1	6	Connector	*Multiple plug, DATA OUTPUT, D-J1	4230-4049	93916	57-40500	5935-062-1776
	MISCELLANEOUS						
			**Cover plate	1192-8050	24655	1192-8050	

SIGNAL INDEX

Signal	Description	Fig. Ref. 6-
AOUT	Trigger output from INPUT A signal.	3, 4, 8
AOUT1	Trigger output from 100 kHz TEST switch.	4
AOUT2	Trigger output from 0.1 μs PERIOD and TIME INTERVAL switch.	4
AOUT3	Trigger output from 1 μs PERIOD and TIME INTERVAL switch.	4
AOUT4	Trigger output from 10 μs PERIOD and TIME INTERVAL switch.	4
AOUT5	Trigger output from RATIO switch.	3, 4, 8, 11
AIN	INPUT A coupling signal.	4
AIN1	10:1 ATTENUATOR input, 100:1 ATTENUATOR output.	4
AIN2	10:1 ATTENUATOR output, INPUT A circuit input.	4, 8
AIN3	RATIO switch output; INPUT A circuit input.	3, 4, 8
B	Logic 1 signal (+5 V)	4, 9
CG	Count gate output signal.	4, 9, 11, 15
$\overline{CL}$	Clear pulse from program and display circuit.	3, 4, 9
$\overline{CL1}$	Clear pulse from STORAGE switch.	4
$\overline{CL2}$	Clear pulse from RESET switch.	4
D1	Decimal point control signal for C-V1	4, 11
D2	Decimal point control signal for C-V2	4, 11
D3	Decimal point control signal for C-V3	4, 11
D4	Decimal point control signal for C-V4	4, 11
D11	1st digit 1-bit buffered data output.	15
D12	1st digit 2-bit buffered data output.	15
D14	1st digit 4-bit buffered data output.	15
D18	1st digit 8-bit buffered data output.	15
D21	2nd digit 1-bit buffered data output.	15
D22	2nd digit 2-bit buffered data output.	15
D24	2nd digit 4-bit buffered data output.	15
D28	2nd digit 8-bit buffered data output.	15
D31	3rd digit 1-bit buffered data output.	15
D32	3rd digit 2-bit buffered data output.	15
D34	3rd digit 4-bit buffered data output.	15
D38	3rd digit 8-bit buffered data output.	15
D41	4th digit 1-bit buffered data output.	15
D42	4th digit 2-bit buffered data output.	15
D44	4th digit 4-bit buffered data output.	15
D48	4th digit 8-bit buffered data output.	15
D51	5th digit 1-bit buffered data output.	15
D52	5th digit 2-bit buffered data output.	15
D54	5th digit 4-bit buffered data output.	15
D58	5th digit 8-bit buffered data output.	15
D61	6th digit 1-bit buffered data output.	15
D62	6th digit 2-bit buffered data output.	15
D68	6th digit 8-bit buffered data output.	15
D71	7th digit 1-bit buffered data output.	15
D72	7th digit 2-bit buffered data output.	15
D74	7th digit 4-bit buffered data output.	15
D78	7th digit 8-bit buffered data output.	15
DP1	Decimal point control signal for 0.1 μs PERIOD and TIME INTERVAL.	4
DP2	Decimal point control signal for 1 μs PERIOD and TIME INTERVAL.	4
DP3	Decimal point control signal for 10 μs PERIOD and TIME INTERVAL.	

Signal	Description	Fig. Ref. 6-
DP4	Decimal point control signal for FREQUENCY operation.	4
DTOUT1	Time-base divider output, GT01 divided by 10.	3, 4, 13
DTOUT2	Time-base divider output, GT01 divided by 100.	3, 4, 13
DTOUT3	Time-base divider output, GT01 divided by 1000.	3, 4, 13
DTOUT4	Time-base divider output, GT01 divided by 10,000.	3, 4, 13
DTOUT5	Time-base divider output, GR01 divided by 100,000.	3, 4, 13
E11	1st digit 1-bit complement.	4, 11, 15
E12	1st digit 2-bit complement.	4, 11, 15
E14	1st digit 4-bit complement.	4, 11, 15
E18	1st digit 8-bit complement.	4, 11, 15
E21	2nd digit 1-bit complement.	4, 11, 15
E22	2nd digit 2-bit complement.	4, 11, 15
E24	2nd digit 4-bit complement.	4, 11, 15
E28	2nd digit 8-bit complement.	4, 11, 15
E31	3rd digit 1-bit complement.	4, 11, 15
E32	3rd digit 2-bit complement.	4, 11, 15
E34	3rd digit 4-bit complement.	4, 11, 15
E38	3rd digit 8-bit complement.	4, 11, 15
E41	4th digit 1-bit complement.	4, 11, 15
E42	4th digit 2-bit complement.	4, 11, 15
E44	4th digit 4-bit complement.	4, 11, 15
E48	4th digit 8-bit complement.	4, 11, 15
E51	5th digit 1-bit complement.	4, 12, 15
E52	5th digit 2-bit complement.	4, 12, 15
E54	5th digit 4-bit complement.	4, 12, 15
E58	5th digit 8-bit complement.	4, 12, 15
E61	6th digit 1-bit complement.	4, 12, 15
E62	6th digit 2-bit complement.	4, 12, 15
E64	6th digit 4-bit complement.	4, 12, 15
E68	6th digit 8-bit complement.	4, 12, 15
E71	7th digit 1-bit complement.	4, 12, 15
E72	7th digit 2-bit complement.	4, 12, 15
E74	7th digit 4-bit complement.	4, 12, 15
E78	7th digit 8-bit complement.	4, 12, 15
EXO	Output signal from INPUT B circuit to RATIO push button.	3, 4, 7
EXO1	Output signal from INPUT B circuit to phase-lock detector.	4, 7
GTOUT1	Gated time-base pulses.	3, 4, 9, 13
GTOUT2	Gated time-base pulses from the range switch.	3, 4, 9
INB	INPUT B signal.	4, 7
LF	Signal to frequency-unit designator (Hz, kHz, MHz).	4, 13
LT	Signal to time-unit designator (ns µs, ms).	4, 9, 13
MG	Main gate output signal.	3, 4, 9, 11, 12
OSC	Output signal from the internal oscillator.	3, 4, 7
PGT	Print command from Data Output board.	15
PH	Input to phase-lock detector.	3, 4, 7
RA1	Resetting control line from FREQUENCY and RATIO switches.	4, 9
$\overline{RA1}$	Control line for start and stop of main gate.	4, 9
$\overline{RE}$	Reset pulse from the display timing circuit.	3, 4, 9, 13
RE1	Reset pulse for first four counting registers and Main gate FF.	4, 9, 11, 13
$\overline{RE1}$	Reset pulse for count gate FF	
RE2	Register reset pulse for fifth, sixth and seventh registers.	4, 12, 13

Signal	Description	Fig. Ref. 6-
$\overline{RE2}$	Reset pulse for counting gate and first flip-flops in counting register.	4, 11, 13
RE3	Reset pulse for the five time-base dividers.	4, 13
$\overline{RE3}$	Reset pulse for spill circuit.	4, 12, 13
$\overline{RM}$	Reset pulse from RESET button to display timing circuit.	4, 9
$\overline{SP}$	Pulse from STOP INPUT.	4, 9
$\overline{SP1}$	Stop pulse from COUNT switch.	4, 9
$\overline{ST}$	Pulse from START INPUT.	4, 9
TB1	Clock output (10 MHz).	3, 4, 7
TB2	Clock output divided by 10 (1 MHz).	3, 4, 7
TB3	Clock output divided by 100 (100 kHz).	3, 4, 7
TB4	Clock output divided by 1000 (10 kHz).	3, 4, 7
TIN	Clock divider input.	3, 4, 7
TIN1	Count-gate input.	4, 9
TR	Transfer pulse to initiate display time and to storage switch.	3, 4, 7
TR1	Transfer pulse input to transfer gates.	4, 11, 13
TR1	Transfer pulse input for SPILL and COUNT circuits.	4, 12
INT OSC	Internal oscillator output.	4
VA	Phase-lock detector output.	3, 4, 7

FEDERAL MANUFACTURER'S CODE

From Federal Supply Code for Manufacturers Cataloging Handbooks H4-1 (Name to Code) and H4-2 (Code to Name) as supplemented through August, 1968.

Code	Manufacturer
00192	Jones Mfg. Co, Chicago, Illinois
00194	Walsco Electronics Corp, L.A., Calif.
00434	Schweber Electronics, Westburg, L.I., N.Y.
00656	Aerovox Corp, New Bedford, Mass.
01009	Alden Products Co, Brockton, Mass.
01121	Allen-Bradley, Co, Milwaukee, Wisc.
01295	Texas Instruments, Inc, Dallas, Texas
02114	Ferroxcube Corp, Saugerties, N.Y. 12477
02606	Fenwal Lab Inc, Morton Grove, Ill.
02660	Amphenol Electron Corp, Broadview, Ill.
02768	Fastex, Des Plaines, Ill. 60016
03508	G.E. Semicon Prod, Syracuse, N.Y. 13201
03636	Grayburne, Yonkers, N.Y. 10701
03888	Pyrofilm Resistor Co, Cedar Knolls, N.J.
03911	Clairex Corp, New York, N.Y. 10001
04009	Arrow-Hart & Hegeman, Hartford, Conn. 06106
04713	Motorola, Phoenix, Ariz. 85008
05170	Engr'd Electronics, Santa Ana, Calif. 92702
05624	Barber-Colman Co, Rockford, Ill. 61101
05820	Wakefield Eng, Inc, Wakefield, Mass. 01880
07126	Digitron Co, Pasadena, Calif.
07127	Eagle Signal (E.W. Bliss Co), Baraboo, Wisc.
07261	Avnet Corp, Culver City, Calif. 90230
07263	Fairchild Camera, Mountain View, Calif.
07387	Birtcher Corp, No. Los Angeles, Calif.
07595	Amer Semicond, Arlington Hts, Ill. 60004
07828	Bodine Corp, Bridgeport, Conn. 06605
07829	Bodine Electric Co, Chicago, Ill. 60618
07910	Cont Device Corp, Hawthorne, Calif.
07983	State Labs Inc, N.Y., N.Y. 10003
07999	Borg Inst., Delavan, Wisc. 53115
08730	Vemaline Prod Co, Franklin Lakes, N.J.
09213	G.E. Semiconductor, Buffalo, N.Y.
09408	Star-Tronics Inc, Georgetown, Mass. 01830
09823	Burgess Battery Co, Freeport, Ill.
09922	Burndy Corp, Norwalk, Conn. 06852
11236	C.T.S. of Berne, Inc, Berne, Ind. 46711
11599	Chandler Evans Corp, W. Hartford, Conn.
0040	National Semiconductor, Danbury, Conn.
98	Crystalonics, Cambridge, Mass. 02140
72	RCA, Woodbridge, N.J.
697	Clarostat Mfg Co, Inc, Dover, N.H. 03820
12954	Dickson Electronics, Scottsdale, Ariz.
13327	Solitron Devices, Tappan, N.Y. 10983
14433	ITT Semicondictors, W.Palm Beach, Fla.
14655	Cornell-Dubilier Electric Co, Newark, N.J.
14674	Corning Glass Works, Corning, N.Y.
14936	General Instrument Corp, Hicksville, N.Y.
15238	ITT, Semiconductor Div, Lawrence, Mass.
15605	Cutlet-Hammer Inc, Milwaukee, Wisc. 53233
16037	Spruce Pine Mica Co, Spruce Pine, N.C.
17771	Singer Co, Diehl Div, Somerville, N.J.
19396	Illinois Tool Works, Pakton Div, Chicago, Ill.
19644	LRC Electronics, Horseheads, N.Y.
19701	Electra Mfg Co, Independence, Kansas 67301
21335	Fafnir Bearing Co, New Briton, Conn.
22753	UID Electronics Corp, Hollywood, Fla.
23342	Avnet Electronics Corp, Franklin Park, Ill.
24446	G.E., Schenectady, N.Y. 12305
24454	G.E., Electronics Comp, Syracuse, N.Y.
24455	G.E. (Lamp Div), Nela Park, Cleveland, Ohio
24655	General Radio Co, W. Concord, Mass. 01781
26806	American Zettlet Inc, Costa Mesa, Calif.
28520	Hayman Mfg Co, Kenilworth, N.J.
28959	Hoffman Electronics Corp, El Monte, Calif.
30874	I.B.M, Armonk, New York
32001	Jensen Mfg. Co, Chicago, Ill. 60638
33173	G.E. Comp, Owensboro, Ky. 42301
35929	Constanta Co, Mont. 19, Que.
37942	P.R. Mallory & Co Inc, Indianapolis, Ind.
38443	Marlin-Rockwell Corp, Jamestown, N.Y.
40931	Honeywell Inc, Minneapolis, Minn. 55408
42190	Muter Co, Chicago, Ill. 60638
42498	National Co, Inc, Melrose, Mass. 02176
43991	Norma-Hoffman, Stanford, Conn. 06904
49671	RCA, New York, N.Y. 10020
49956	Raytheon Mfg Co, Waltham, Mass. 02154
53021	Sangamo Electric Co, Springfield, Ill. 62705
54294	Shallcross Mfg Co, Selma, N.C.
54715	Shure Brothers, Inc, Evanston, Ill.
56289	Sprague Electric Co, N. Adams, Mass.
59730	Thomas and Betts Co, Elizabeth, N.J. 07207
59875	TRW Inc, (Accessories Div), Cleveland, Ohio
60399	Torrington Mfg Co, Torrington, Conn.
61637	Union Carbide Corp, New York, N.Y. 10017
61864	United-Carr Fastener Corp, Boston, Mass.
63060	Victoreen Instrument Co, Inc, Cleveland, O.
63743	Ward Leonard Electric Co, Mt. Vernon, N.Y.
65083	Westinghouse (Lamp Div), Bloomfield, N.J.
65092	Weston Instruments, Newark, N.J.
70485	Atlantic-India Rubber, Chicago, Ill. 60607
70563	Amperite Co, Union City, N.J. 07087
70903	Belden Mfg Co, Chicago, Ill. 60644
71126	Bronson, Homer D, Co, Beacon Falls, Conn.
71294	Canfield, H.O. Co, Clifton Forge, Va. 24422
71400	Bussman (McGraw Edison), St. Louis, Mo.
71468	ITT Cannon Elec, L.A., Calif. 90031
71590	Centralab, Inc, Milwaukee, Wisc. 53212
71666	Continental Carbon Co, Inc, New York, N.Y.
71707	Coto Coil Co Inc, Providence, R.I.
71744	Chicago Miniature Lamp Works, Chicago, Ill.
71785	Cinch Mfg Co, Chicago, Ill. 60624
71823	Darnell Corp, Ltd, Downey, Calif. 90241
72136	Electro Motive Mfg Co, Wilmington, Conn.
72259	Nytronics Inc, Berkeley Heights, N.J. 07922
72619	Dialight Co, Brooklyn, N.Y. 11237
72699	General Instr Corp, Newark, N.J. 07104
72765	Drake Mfg Co, Chicago, Ill. 60656
72825	Hugh H. Eby Inc, Philadelphia, Penn. 19144
72962	Elastic Stop Nut Corp, Union, N.J. 07083
72982	Erie Technological Products Inc, Erie, Penn.
73138	Beckman Inc, Fullerton, Calif. 92634
73445	Amperex Electronics Co, Hicksville, N.Y.
73559	Carling Electric Co, W.Hartford, Conn.
73690	Elco Resistor Co, New York, N.Y.
73899	JFD Electronics Corp, Brooklyn, N.Y.
74193	Heinemann Electric Co, Trenton, N.J.
74861	Industrial Condenser Corp, Chicago, Ill.
74970	E.F. Johnson Co, Waseca, Minn. 56093
75042	IRC Inc, Philadelphia, Penn. 19108
75382	Kulka Electric Corp, Mt. Vernon, N.Y.
75491	Lafayette Industrial Electronics, Jamica, N.Y.
75608	Linden and Co, Providence, R.I.
75915	Littelfuse, Inc, Des Plaines, Ill. 60016
76005	Lord Mfg Co, Erie, Penn. 16512
76149	Mallory Electric Corp, Detroit, Mich. 48204
76487	James Millen Mfg Co, Malden, Mass. 02148
76545	Mueller Electric Co, Cleveland, Ohio 44114
76684	National Tube Co, Pittsburg, Penn.
76854	Oak Mfg Co, Crystal Lake, Ill.
77147	Patton MacGuyer Co, Providence, R.I.
77166	Pass-Seymour, Syracuse, N.Y.
77263	Pierce Roberts Rubber Co, Trenton, N.J.
77339	Positive Lockwasher Co, Newark, N.J.
77542	Ray-O-Vac Co, Madison, Wisc.
77630	TRW, Electronic Comp, Camden, N.J. 08103
77638	General Instruments Corp, Brooklyn, N.Y.
78189	Shakeproof (Ill. Tool Works), Elgin, Ill. 60120
78277	Sigma Instruments Inc, S.Braintree, Mass.
78488	Stackpole Carbon Co, St. Marys, Penn.
78553	Tinnerman Products, Inc, Cleveland, Ohio
79089	RCA, Rec Tube & Semicond, Harrison, N.J.
79725	Wiremold Co, Hartford, Conn. 06110
79963	Zierick Mfg Co, New Rochelle, N.Y.
80030	Prestole Fastener, Toledo, Ohio
80048	Vickers Inc, St. Louis, Mo.
80131	Electronic Industries Assoc, Washington, D.C.
80183	Sprague Products Co, No. Adams, Mass.
80211	Motorola Inc, Franklin Park, Ill. 60131
80258	Standard Oil Co, Lafeyette, Ind.
80294	Bourns Inc, Riverside, Calif. 92506
80431	Air Filter Corp, Milwaukee, Wisc. 53218
80583	Hammarlund Co, Inc, New York, N.Y.
80740	Beckman Instruments, Inc, Fullerton, Calif.
81030	International Insturment, Orange, Conn.
81073	Grayhill Inc, LaGrange, Ill. 60525
81143	Isolantite Mfg Corp, Stirling, N.J. 07980
81349	Military Specifications
81350	Joint Army-Navy Specifications
81751	Columbus Electronics Corp, Yonkers, N.Y.
81831	Filtron Co, Flushing, L.I., N.Y. 11354
81840	Ledex Inc, Dayton, Ohio 45402
81860	Barry-Wright Corp, Watertown, Mass.
82219	Sylvania Elec Prod, Emporium, Penn.
82273	Indiana Pattern & Model Works, LaPort, Ind.
82389	Switchcraft Inc, Chicago, Ill. 60630
82647	Metals & Controls Inc, Attleboro, Mass.
82807	Milwaukee Resistor Co, Milwaukee, Wisc.
83033	Meissner Mfg, (Maguire Ind) Mt. Carmel, Ill.
83058	Carr Fastener Co, Cambridge, Mass.
83186	Victory Engineering, Springfield, N.J. 07081
83361	Bearing Specialty Co, San Francisco, Calif.
83587	Solar Electric Corp, Warren, Penn.
83740	Union Carbide Corp, New York, N.Y. 10017
83781	National Electronics Inc, Geneva, Ill.
84411	TRW Capacitor Div, Ogallala, Nebr.
84835	Lehigh Metal Prods, Cambridge, Mass. 02140
84971	TA Mfg Corp, Los Angeles, Calif.
86577	Precision Metal Prods, Stoneham, Mass. 02180
86684	RCA (Elect. Comp & Dev), Harrison, N.J.
86687	REC Corp, New Rochelle, N.Y. 10801
86800	Cont Electronics Corp, Brooklyn, N.Y. 11222
88140	Cutler-Hammer Inc, Lincoln, Ill.
88219	Gould Nat. Batteries Inc, Trenton, N.J.
88419	Cornell-Dubilier, Fuquay-Varina, N.C.
88627	K & G Mfg Co, New York, N.Y.
89482	Holtzer-Cabot Corp, Boston, Mass.
89665	United Transformer Co, Chicago, Ill.
90201	Mallory Capacitor Co, Indianapolis, Ind.
90750	Westinghouse Electric Corp, Boston, Mass.
90952	Hardware Products Co, Reading, Penn. 19602
91032	Continental Wire Corp, York, Penn. 17405
91146	ITT (Cannon Electric Inc), Salem, Mass.
91293	Johanson Mfg Co, Boonton, N.J. 07005
91506	Augat Inc, Attleboro, Mass. 02703
91598	Chandler Co, Wethersfield, Conn. 06109
91637	Dale Electronics Inc, Columbus, Nebr.
91662	Elco Corp, Willow Grove, Penn.
91719	General Instruments, Inc, Dallas, Texas
91929	Honeywell Inc, Freeport, Ill.
92519	Electra Insul Corp, Woodside, L.I., N.Y.
92678	E.G.&G., Boston, Mass.
93332	Sylvania Elect Prods, Inc, Woburn, Mass.
93916	Cramer Products Co, New York, N.Y. 10013
94144	Raytheon Co, Components Div, Quincy, Mass.
94154	Tung Sol Electric Inc, Newark, N.J.
95076	Garde Mfg Co, Cumberland, R.I.
95121	Quality Components Inc, St. Mary's, Penn.
95146	Alco Electronics Mfg Co, Lawrence, Mass.
95238	Continental Connector Corp, Woodside, N.Y.
95275	Vitramon, Inc, Bridgeport, Conn.
95354	Methode Mfg Co, Chicago, Ill.
95412	General Electric Co, Schenectady, N.Y.
95794	Anaconda Amer Brass Co, Torrington, Conn.
96095	Hi-Q Div. of Aerovox Corp, Orlean, N.Y.
96214	Texas Instruments Inc, Dallas, Texas 75209
96256	Thordarson-Meissner, Mt. Carmel, Ill.
96341	Microwave Associates Inc, Burlington, Mass.
96791	Amphenol Corp, Jonesville, Wisc, 53545
96906	Military Standards
98291	Sealectro Corp, Mamaroneck, N.Y. 10544
98474	Compar Inc, Burlingame, Calif.
98821	North Hills Electronics Inc, Glen Cove, N.Y.
99180	Transitron Electronics Corp, Melrose, Mass.
99313	Varian, Palo Alto, Calif. 94303
99378	Atlee Corp, Winchester, Mass. 01890
99800	Delevan Electronics Corp, E. Aurora, N.Y.

NOTE

Parts and components with the prefix A are mounted on the chassis. Prefix B indicates the Program Board, C the Display Board, and D the Data-Output Board. A designation, adjacent to a signal block indicates the schematic, which shows the pertinent circuit details (e.g., B2 is the second B-board schematic). A B2 will be found on the lower right-hand side of a schematic to indicate the location of the diagram.

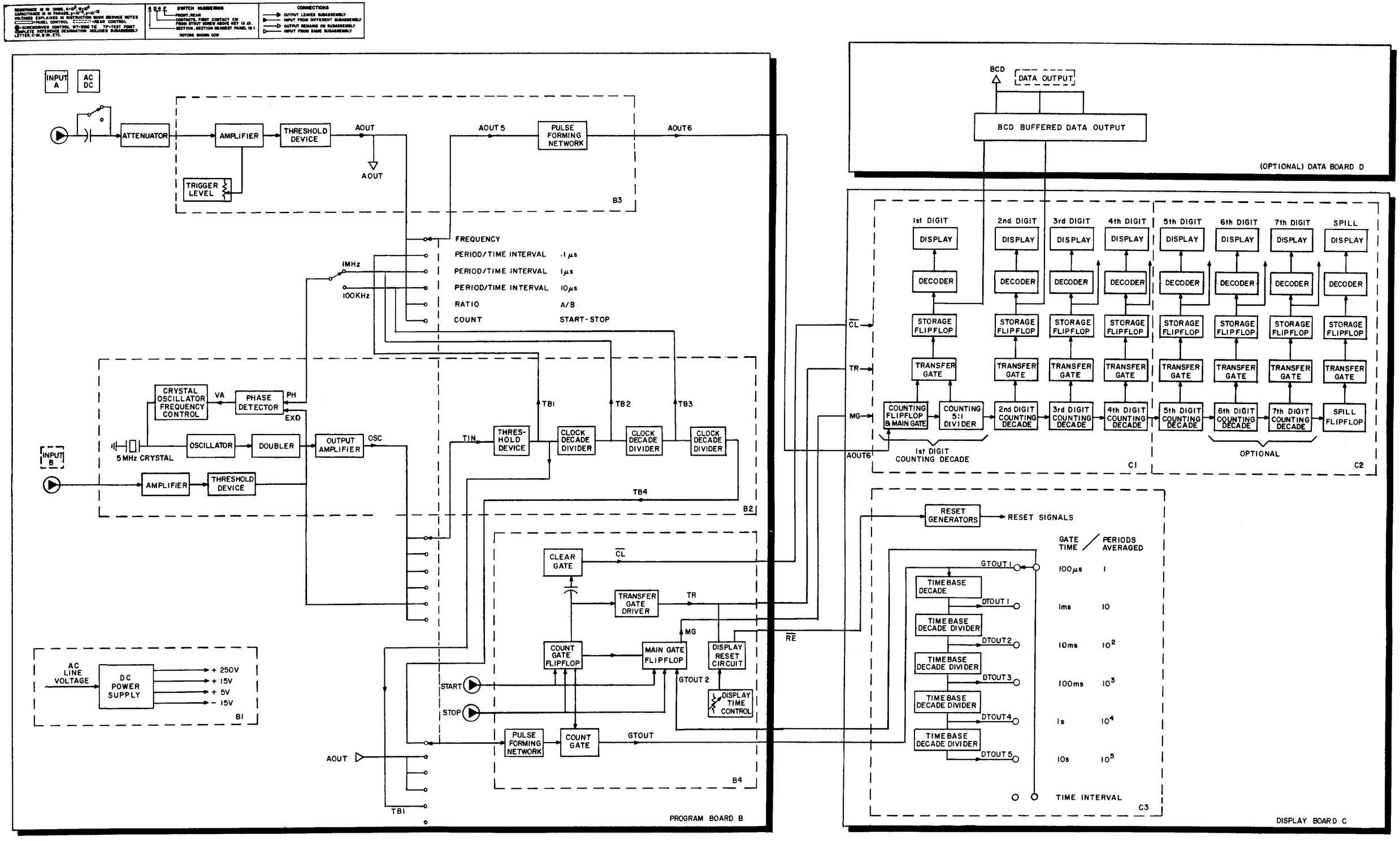

Figure 6-3. Block diagram of the 1192 counter. **BLOCK**

ELECTRICAL PARTS LIST (cont)

Ref Des	Description	GR Part No.	Fed Mfg Code	Mfg Part No.	Fed Stock No.
CAPACITOR					
A-C1	Ceramic 0.047 μF +80-20 250 V	4409-3479	72982	3851, 0.047 μF +80-20%	
FUSES					
A-F1	Slo-Blo 4/10A	5330-0900	71400	MDL, 0.4 Amp	
A-F2	Slo-Blo 2/10A	5330-0600	71400	MDL, 0.2 Amp	
PLUGS					
A-J1	Connector, Multiple Socket	4230-2301	09408	UG-1094A/U	
A-J2	Connector, Power Plug	4240-0600	24655	4240-0600	5935-816-0254
A-J3	Connector, Mutiple Socket	4230-2300	81349	UG-1094/U	
A-J4	Connector, Multiple Socket	4230-2300	81349	UG-1094/U	
A-J5	Connector, Multiple Socket	4230-2300	81349	UG-1094/U	
TRANSFORMER					
A-T1	Power	0345-4033	24655	0345-4033	
RESISTORS					
A-R1	Pot. Comp. 500 kΩ ±10%	6041-0100	01121	GA, 500 kΩ ±10%	
A-R2	Pot. Comp.1 kΩ ±10%	6041-2109	01121	GA, 1 kΩ ±10%	
SWITCHES					
A-S1	Toggle	7910-0791	95146	MST-205N	
A-S2	Toggle	7910-0790	95146	MST-105D	
A-S3	Toggle	7910-0831	42190	4603	
A-S4		Part of A-R1			

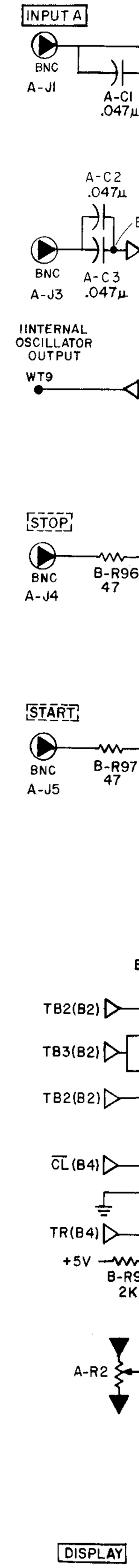

RESISTANCE IS IN OHMS, K=10^3, M=10^6
CAPACITANCE IS IN FARADS, μ=10^{-6}, p=10^{-12}
VOLTAGES EXPLAINED IN INSTRUCTION BOOK SERVICE NOTES
▭=PANEL CONTROL ⬚=REAR CONTROL
●=SCREWDRIVER CONTROL WT=WIRE TIE TP=TEST POINT
COMPLETE REFERENCE DESIGNATION INCLUDES SUBASSEMBLY LETTER, C-R1, B-R1, ETC.

4 0 4 F SWITCH NUMBERING
F — FRONT, REAR
4 — CONTACTS. FIRST CONTACT CW FROM STRUT SCREW ABOVE KEY IS #1.
0 — SECTION. SECTION NEAREST PANEL IS 1.
ROTORS SHOWN CCW

CONNECTIONS
→ OUTPUT LEAVES SUBASSEMBLY
▶— INPUT FROM DIFFERENT SUBASSEMBLY
—▷ OUTPUT REMAINS ON SUBASSEMBLY
▷— INPUT FROM SAME SUBASSEMBLY

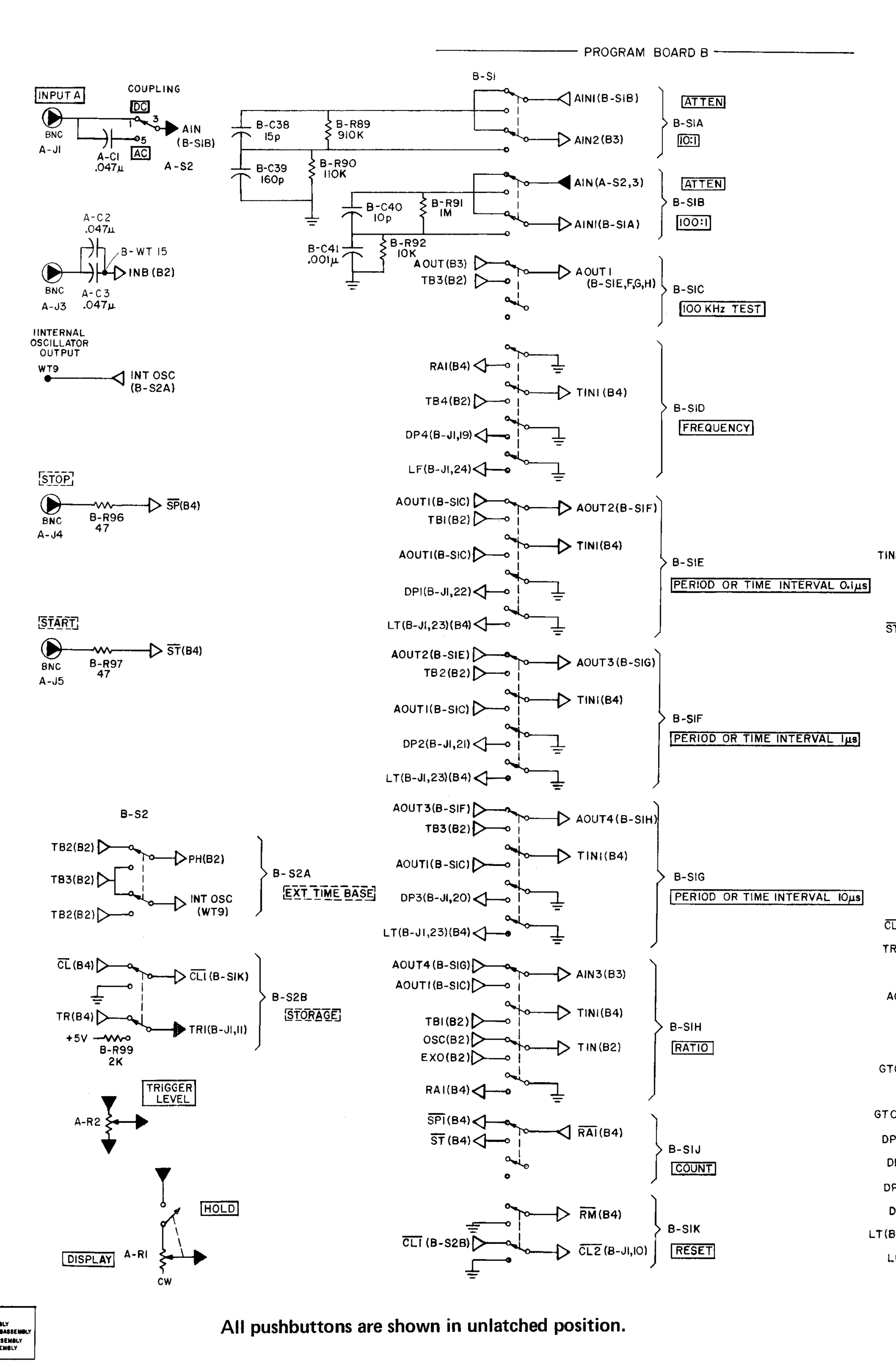

All pushbuttons are shown in unlatched position.

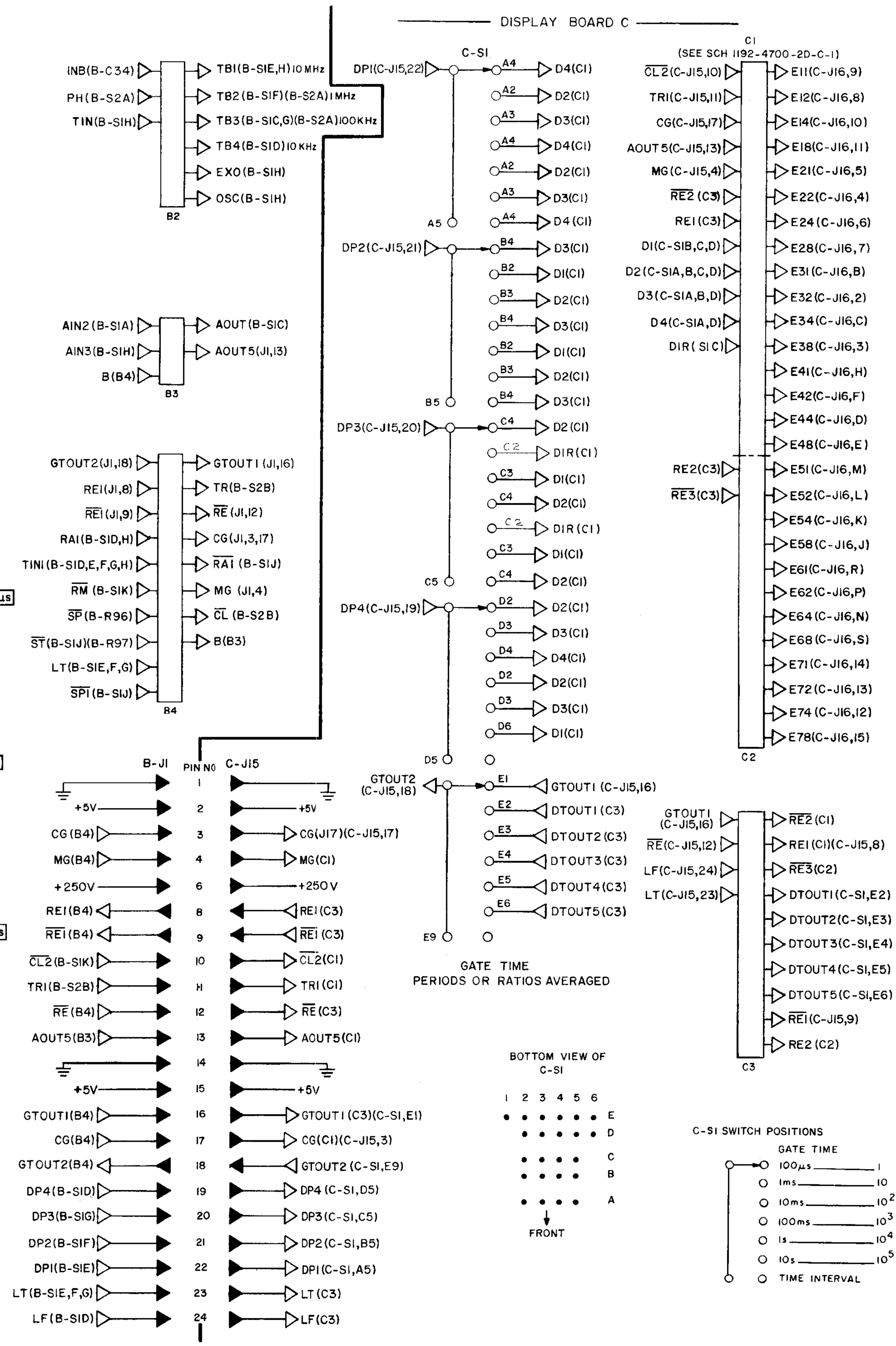
DISPLAY BOARD C
B2
INB(B-C34)
PH(B-S2A)
TIN(B-SIH)
TB1(B-SIE,H) 10 MHz
TB2(B-SIF)(B-S2A) 1 MHz
TB3(B-SIC,G)(B-S2A) 100 KHz
TB4(B-SID) 10 KHz
EXO(B-SIH)
OSC(B-SIH)
B3
AIN2(B-SIA)
AIN3(B-SIH)
B(B4)
AOUT(B-SIC)
AOUT5(J1,13)
B4
GTOUT2(J1,18)
RE1(J1,8)
RE1(J1,9)
RA1(B-SID,H)
TIN1(B-SID,E,F,G,H)
RM (B-SIK)
SP(B-R96)
ST(B-SIJ)(B-R97)
LT(B-SIE,F,G)
SP1(B-SIJ)
GTOUT1 (J1,16)
TR(B-S2B)
RE (J1,12)
CG(J1,3,17)
RA1 (B-SIJ)
MG (J1,4)
CL (B-S2B)
B(B3)
C-SI
DP1(C-J15,22)
A5
DP2(C-J15,21)
B5
DP3(C-J15,20)
C5
DP4(C-J15,19)
D5
GTOUT2 (C-J15,18)
E9
D4(C1)
D2(C1)
D3(C1)
D4(C1)
D2(C1)
D3(C1)
D4 (C1)
D3(C1)
D1(C1)
D2(C1)
D3(C1)
D1(C1)
D2(C1)
D3(C1)
D2 (C1)
DIR(C1)
D1(C1)
D2(C1)
DIR (C1)
D1(C1)
D2(C1)
D2(C1)
D3(C1)
D4(C1)
D2(C1)
D3(C1)
D1(C1)
E1 GTOUT1 (C-J15,16)
E2 DTOUT1 (C3)
E3 DTOUT2 (C3)
E4 DTOUT3 (C3)
E5 DTOUT4 (C3)
E6 DTOUT5 (C3)
GATE TIME
PERIODS OR RATIOS AVERAGED
C1
(SEE SCH 1192-4700-2D-C-1)
CL2(C-J15,10)
TR1(C-J15,11)
CG(C-J15,17)
AOUT5(C-J15,13)
MG(C-J15,4)
RE2 (C3)
RE1 (C3)
D1(C-SIB,C,D)
D2(C-SIA,B,C,D)
D3(C-SIA,B,D)
D4(C-SIA,D)
DIR(SIC)
RE2(C3)
RE3(C3)
E11(C-J16,9)
E12(C-J16,8)
E14(C-J16,10)
E18(C-J16,11)
E21(C-J16,5)
E22(C-J16,4)
E24(C-J16,6)
E28(C-J16,7)
E31(C-J16,B)
E32(C-J16,2)
E34(C-J16,C)
E38(C-J16,3)
E41(C-J16,H)
E42(C-J16,F)
E44(C-J16,D)
E48(C-J16,E)
E51(C-J16,M)
E52(C-J16,L)
E54(C-J16,K)
E58(C-J16,J)
E61(C-J16,R)
E62(C-J16,P)
E64(C-J16,N)
E68(C-J16,S)
E71(C-J16,14)
E72(C-J16,13)
E74(C-J16,12)
E78(C-J16,15)
C2
GTOUT1
(C-J15,16)
RE(C-J15,12)
LF(C-J15,24)
LT(C-J15,23)
RE2(C1)
RE1(C1)(C-J15,8)
RE3(C2)
DTOUT1(C-SI,E2)
DTOUT2(C-SI,E3)
DTOUT3(C-SI,E4)
DTOUT4(C-SI,E5)
DTOUT5(C-SI,E6)
RE1(C-J15,9)
RE2 (C2)
C3
B-J1
PIN NO
C-J15
1
+5V
2
+5V
CG (B4)
3
CG(J17)(C-J15,17)
MG(B4)
4
MG(C1)
+250V
6
+250V
RE1(B4)
8
RE1(C3)
RE1(B4)
9
RE1 (C3)
CL2(B-SIK)
10
CL2(C1)
TR1(B-S2B)
11
TR1 (C1)
RE(B4)
12
RE(C3)
AOUT5(B3)
13
AOUT5(C1)
14
+5V
15
+5V
GTOUT1(B4)
16
GTOUT1 (C3)(C-SI,E1)
CG(B4)
17
CG(C1)(C-J15,3)
GTOUT2(B4)
18
GTOUT2 (C-SI,E9)
DP4(B-SID)
19
DP4 (C-SI,D5)
DP3(B-SIG)
20
DP3(C-SI,C5)
DP2(B-SIF)
21
DP2(C-SI,B5)
DP1(B-SIE)
22
DP1(C-SI,A5)
LT(B-SIE,F,G)
23
LT (C3)
LF(B-SID)
24
LF(C3)
BOTTOM VIEW OF
C-SI
1 2 3 4 5 6
E
D
C
B
A
FRONT
C-SI SWITCH POSITIONS
GATE TIME
100µs 1
1ms 10
10ms 10^2
100ms 10^3
1s 10^4
10s 10^5
TIME INTERVAL

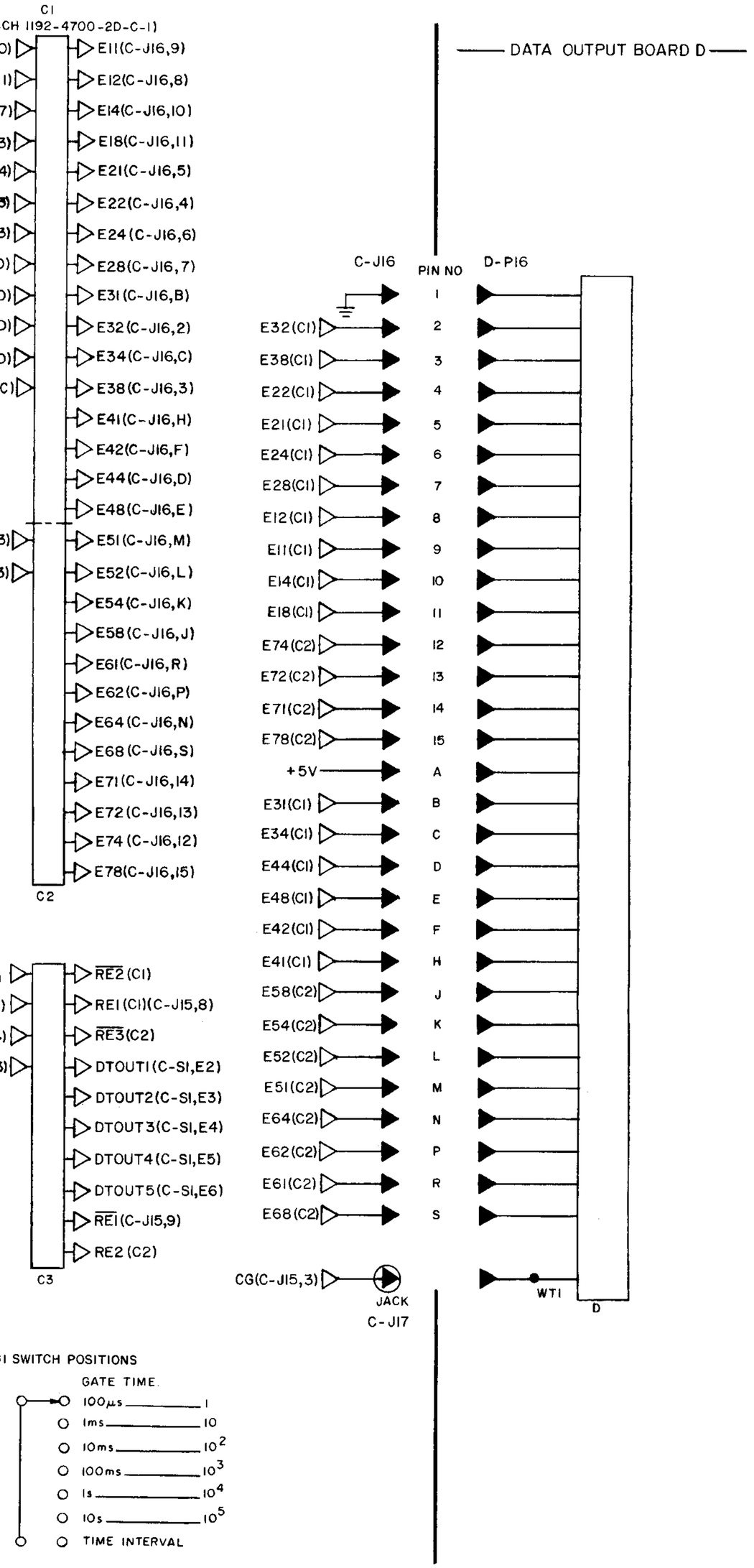

Figure 6-4. Interconnection diagram. **ABCD**

ELECTRICAL PARTS LIST (cont)

Ref Des	Description	GR Part No.	Fed Mfg Code	Mfg Part No.	Fed Stock No.
CAPACITOR					
A-C1	Ceramic 0.047 µF +80-20 250 V	4409-3479	72982	3851, 0.047 µF +80-20%	
FUSES					
A-F1	Slo-Blo 4/10A	5330-0900	71400	MDL, 0.4 Amp	
A-F2	Slo-Blo 2/10A	5330-0600	71400	MDL, 0.2 Amp	
PLUGS					
A-J1	Connector, Multiple Socket	4230-2301	09408	UG-1094A/U	
A-J2	Connector, Power Plug	4240-0600	24655	4240-0600	5935-816-0254
A-J3	Connector, Mutiple Socket	4230-2300	81349	UG-1094/U	
A-J4	Connector, Multiple Socket	4230-2300	81349	UG-1094/U	
A-J5	Connector, Multiple Socket	4230-2300	81349	UG-1094/U	
TRANSFORMER					
A-T1	Power	0345-4033	24655	0345-4033	
RESISTORS					
A-R1	Pot. Comp. 500 kΩ ±10%	6041-0100	01121	GA, 500 kΩ ±10%	
A-R2	Pot. Comp.1 kΩ ±10%	6041-2109	01121	GA, 1 kΩ ±10%	
SWITCHES					
A-S1	Toggle	7910-0791	95146	MST-205N	
A-S2	Toggle	7910-0790	95146	MST-105D	
A-S3	Toggle	7910-0831	42190	4603	
A-S4		Part of A-R1			

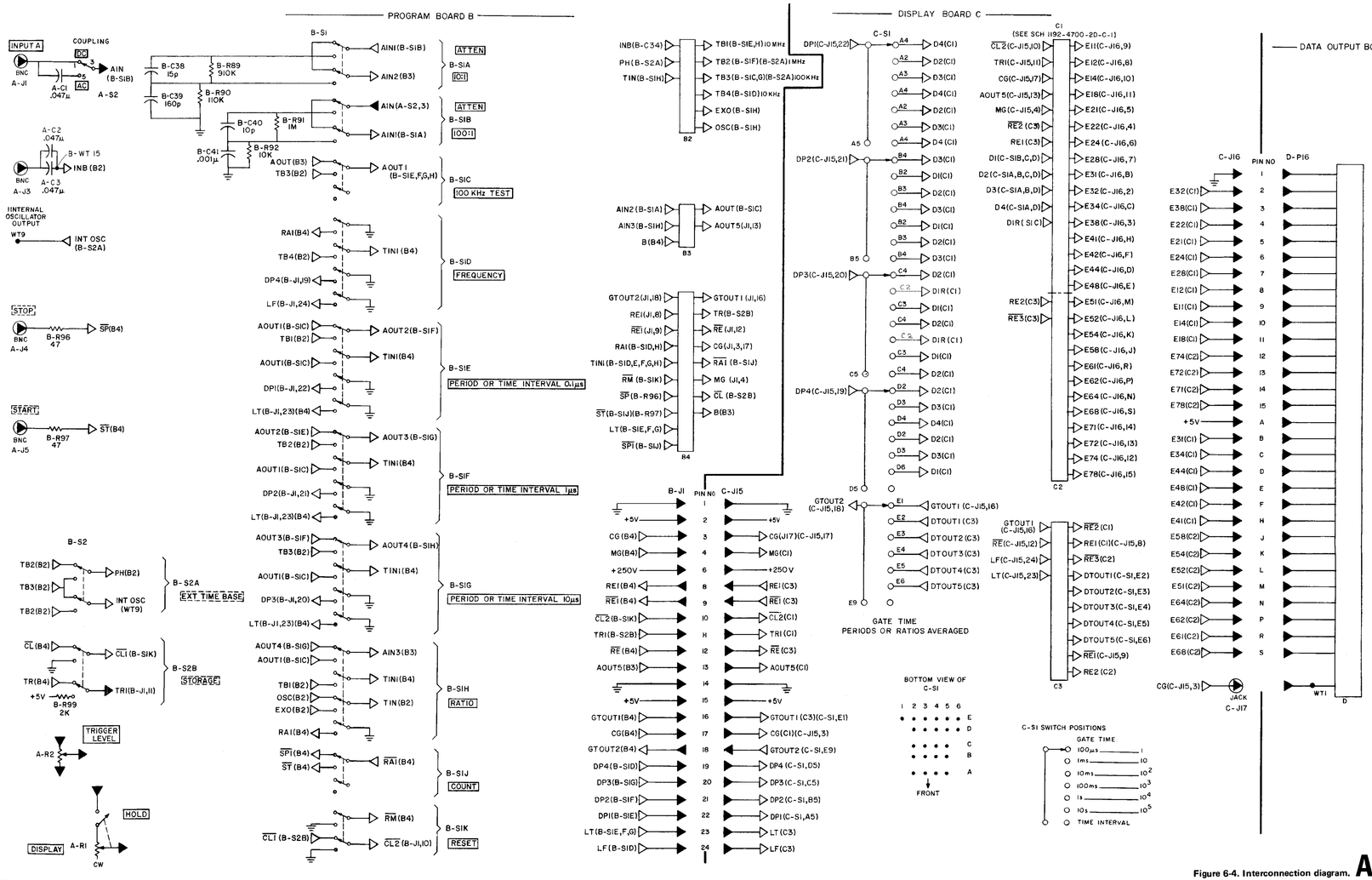

All pushbuttons are shown in unlatched position.

Figure 6-4. Interconnection diagram. **ABCD**

Ref Des	Description	GR Part No.	Fed Mfg Code	Mfg Part No.	Fed Stock No.
CAPACITORS					
B-C1	Mica, 100 pF ±1% 500 V	4710-0010	14655	22A, 100 pF ±1%	
B-C2	Mica, 121 pF ±1% 500 V	4710-0031	14655	22A, 121 pF ±1%	
B-C3	Trimmer 7-25 pF 350 V	4910-2043	72982	538-002, 7 to 25 pF N300	
B-C4	Mica, 965 pF ±0.5% 300 V	4710-1965	14655	22A, 965 pF ±0.5%	
B-C5	Ceramic, 0.01 μF +80-20% 100 V	4401-3100			
B-C6	Ceramic, 0.01 μF +80-20% 100 V	4401-3100	80131	CC61, 0.01 μF +80-20%	5910-974-5697
B-C7	Mica, 130 pF ±1% 500 V	4710-0130	14655	22A, 130 pF ±1%	
B-C8	Ceramic, 0.01 μF +80-20% 100 V	4401-3100	80131	CC61, 0.01 μF +80-20%	5910-974-5697
B-C9	Ceramic, 160 pF ±5% 500 V	4404-1165	72982	831, 160 pF ±5%	
B-C10	Ceramic, 82 pF ±5% 500 V	4404-0825	72982	831, 82 pF ±5%	
B-C11	Electrolytic, 6.8 μF ±20% 6 V	4450-4800	56289	150D685X0010A2	5910-936-1332
B-C13	Ceramic, 0.0033 μF ±10% 500 V	4406-2338	72982	811, .0033μF ±10%	5910-836-5740
B-C14	Electrolytic 3μF +150-10% 350 V	4450-6161	90201	20/000046335/01/00	
B-C15	Electrolytic 495μF +150-10% 35 V	4450-6135	24655	4450-6135	
B-C16	Ceramic .01μF +80-20% 100 V	4401-3100	80131	CC61, .01μF +80-20%	5910-974-5697
B-C17	Electrolytic 392μF +150-10% 35 V	4450-6162	90201	20/000046 334/01/00	
B-C18	Electrolytic 20μF +150-10% 25 V	4450-6063	90201	20/000046 336/01/00	
B-C19	Ceramic .01μF +80-20% 100 V	4401-3100	80131	CC61, .01μF +80-20%	5910-974-5697
B-C20	Electrolytic 3200μF +75-10% 15 V	4450-6220	80183	32D322G015AA0B	
B-C21	Ceramic 0.1μF +80-20% 10 V	4431-4109	80183	20C202	
B-C22	Ceramic 68pF ±10% 500 V	4404-0688	72982	831, 68pF ±10%	
B-C23	Ceramic .0022μF ±10% 500 V	4406-2228	72982	811, .0022μF ±10%	
B-C24	Ceramic 330pF ±10% 500 V	4404-1338	72982	831, 330pF ±10%	5910-974-5702
B-C25	Electrolytic 22μF ±20% 15 V	4450-5300	56289	150D226X0015B2	5910-752-4270
B-C26	Electrolytic 1μF ±20% 35 V	4450-4300	56289	150D105X0035A2	5910-726-5003
B-C27	Ceramic 220pF ±10% 500 V	4404-1228	72982	831, 220pF ±10%	
B-C28	Electrolytic 470pF ±10% 500 V	4405-1478	72982	801, 470pF ±10%	
B-C30	Ceramic 820pF ±10% 500 V	4405-1828	72982	801, 820pF ±10%	
B-C31	Electrolytic 470 pF ±10% 500 V	4405-1478	72982	801, 470 pF ±10%	
B-C32	Ceramic, 82 pF ±5% 500 V	4404-0825	72982	831, 82 pF ±5%	
B-C33	Ceramic, 0.01 μF +80-20% 100 V	4401-3100	80131	CC61, 0.01 μF +80-20%	5910-974-5697
B-C34	Ceramic, 0.047 μF +80-20% 250 V	4409-3479	72982	3851, 0.047 μF +80-20%	
B-C35	Ceramic, 0.01 μF +80-20% 100 V	4401-3100	80131	CC61, 0.01 μF +80-20%	5910-974-5697
B-C36	Electrolytic, 6.8 μF ±20% 6 V	4450-4800	56289	150D685X0010A2	5910-936-1332
B-C37	Electrolytic, 3.3 μF ±20% 15 V	4450-4600	56289	150D335X0015A2	5910-837-9325
B-C38	Ceramic, 15 pF ±5% 500 V	4410-0155	72982	811, 15 pF ±5%	
B-C39	Ceramic, 160 pF ±5% 500 V	4404-1165	72982	831, 160 pF ±5%	
B-C40	Ceramic, 10 pF ±5% 500 V	4410-0105	72982	811, 10 pF ±5%	
B-C41	Ceramic, 0.001 μF ±10% 500 V	4405-2108	72982	801, 0.001 μF ±10%	5910-914-0087
B-C42	Ceramic, 22 pF ±5% 500 V	4404-0225	72982	811, 22 pF ±5%	
B-C43	Ceramic, 0.01 μF +80-20% 100 V	4401-3100	80131	CC61, 0.01 μF +80-20%	5910-974-5697
B-C44	Ceramic, 0.01 μF +80-20% 100 V	4401-3100	80131	CC61, 0.01 μF +80-20%	5910-974-5697
B-C45	Ceramic, 22 pF ±5% 500 V	4410-0225	72982	811, 22 pF ±5%	
B-C46	Ceramic, 0.01 μF +80-20% 100 V	4401-3100	80131	CC61, 0.01 μF +80-20%	5910-974-5697
B-C47	Ceramic, 0.01 μF +80-20% 100 V	4401-3100	80131	CC61, 0.01 μF +80-20%	5910-974-5697
B-C48	Ceramic, 0.01 μF +80-20% 100 V	4401-3100	80131	CC61, 0.01 μF +80-20%	5910-974-5697
B-C49	Electrolytic, 3.3 μF ±20% 15 V	4450-4600	56289	150D335X0015A2	5910-837-9325
B-C50	Electrolytic, 3.3 μF ±20% 15 V	4450-4600	56289	150D335X0015A2	5910-837-9325
B-C51	Electrolytic, 6.8 μF ±20% 6 V	4450-4800	56289	150D685X0010A2	5910-936-1332
B-C52	Electrolytic, 82 pF ±5% 500 V	4404-0825	72982	831, 82 pF ±5%	
B-C53	Electrolytic, 22 pF ±5% 500 V	4410-0225	72982	811, 22 pF ±5%	
B-C54	Electrolytic, 0.01 μF +80-20% 100 V	4401-3100	80131	CC61, 0.01 μF +80-20%	5910-974-5697
DIODES					
B-CR1	Type V-100A	6084-1006	84411	IN953	
B-CR2	Type IN4009	6082-1012	24446	IN4009	5961-892-8700
B-CR3	Type IN4009	6082-1012	24446	IN4009	5961-892-8700
B-CR4	Type IN3604	6082-1001	24446	IN3604	5961-995-2199
B-CR5	Type IN3604	6082-1001	24446	IN3604	5961-995-2199
B-CR6	Type IN3254	6081-1002	09213	IN3254	5961-082-3988
B-CR7	Type IN3254	6081-1002	09213	IN3254	5961-082-3988
B-CR8	Type IN3254	6081-1002	09213	IN3254	5961-082-3988
B-CR9	Type IN3254	6081-1002	09213	IN3254	5961-082-3988
B-CR10	Type IN3253	6081-1001	79089	IN3253	5961-814-4251
B-CR11	Type IN3253	6081-1001	79089	IN3253	5961-814-4251
B-CR12	Type IN3253	6081-1001	79089	IN3253	5961-814-4251
B-CR13	Type IN3253	6081-1001	79089	IN3253	5961-814-4251
B-CR14	Type IN3253	6081-1001	79089	IN3253	5961-814-4251
B-CR15	Type IN3253	6081-1001	79089	IN3253	5961-814-4251
B-CR16	Type IN3253	6081-1001	79089	IN3253	5961-814-4251
B-CR17	Type IN3253	6081-1001	79089	IN3253	5961-814-4251
B-CR18	Type IN9758	6083-1019	91032	IN975B	
B-CR19	Type IN9578	6083-1009	07910	IN957B	

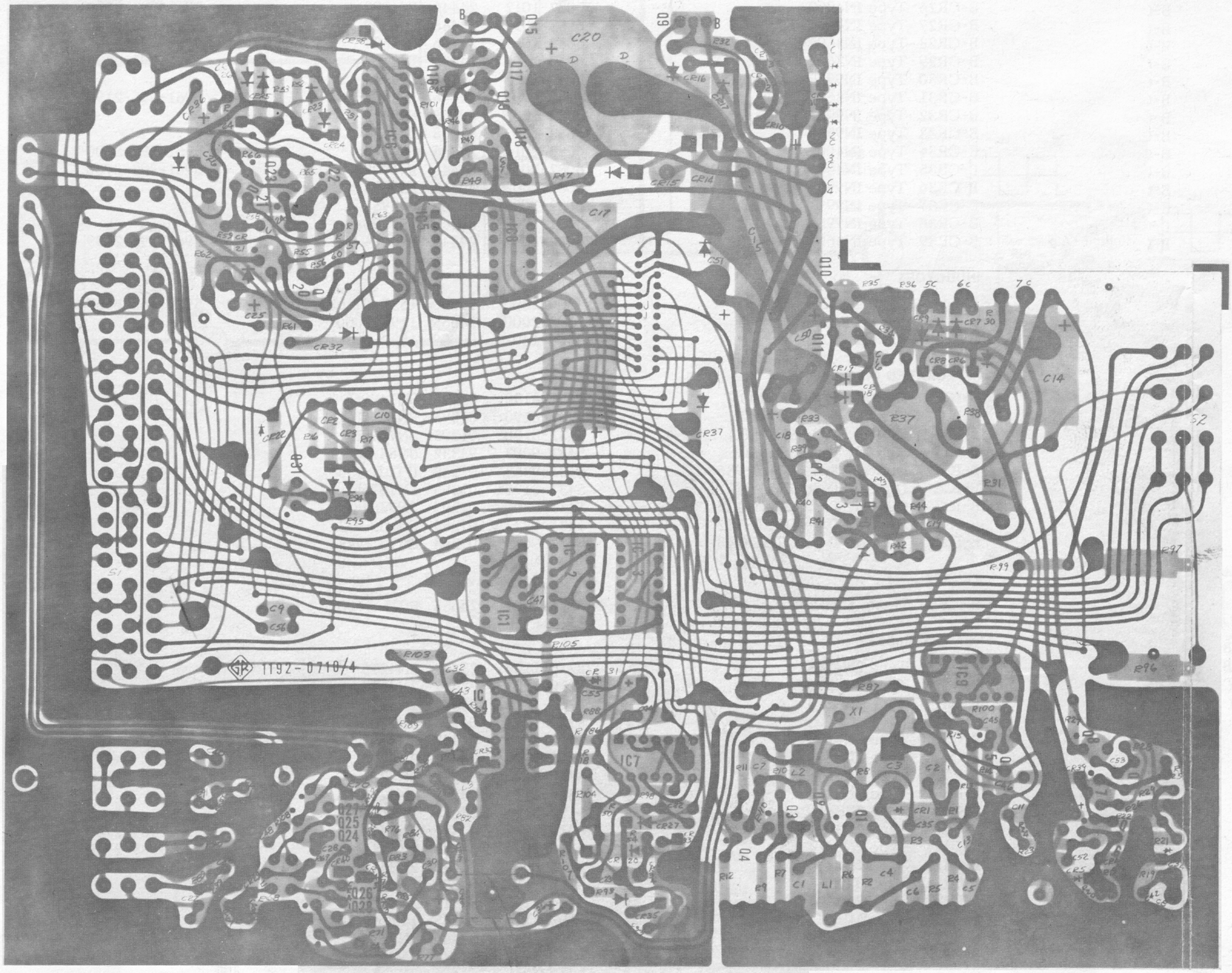

Figure 6-5. Program circuit etched-board assembly (P/N 1192-4710).

NOTE: The board is shown foil-side up. The number appearing on the foil side is *not* the part number. The dot on the foil at the transistor socket indicates the collector lead.

RESISTANCE IS IN OHMS, K=10^3, M=10^6
CAPACITANCE IS IN FARADS, μ=10^{-6}, p=10^{-12}
VOLTAGES EXPLAINED IN INSTRUCTION BOOK SERVICE NOTES
▭=PANEL CONTROL ▭=REAR CONTROL
●=SCREWDRIVER CONTROL WT=WIRE TIE TP=TEST POINT
COMPLETE REFERENCE DESIGNATION INCLUDES SUBASSEMBLY LETTER, C-R1, B-R1, ETC.

404F SWITCH NUMBERING
F — FRONT, REAR
4 — CONTACTS. FIRST CONTACT CW FROM STRUT SCREW ABOVE KEY IS 01.
0 — SECTION. SECTION NEAREST PANEL IS 1.
ROTORS SHOWN CCW

CONNECTIONS
→ OUTPUT LEAVES SUBASSEMBLY
▶ INPUT FROM DIFFERENT SUBASSEMBLY
→▷ OUTPUT REMAINS ON SUBASSEMBLY
▷ INPUT FROM SAME SUBASSEMBLY

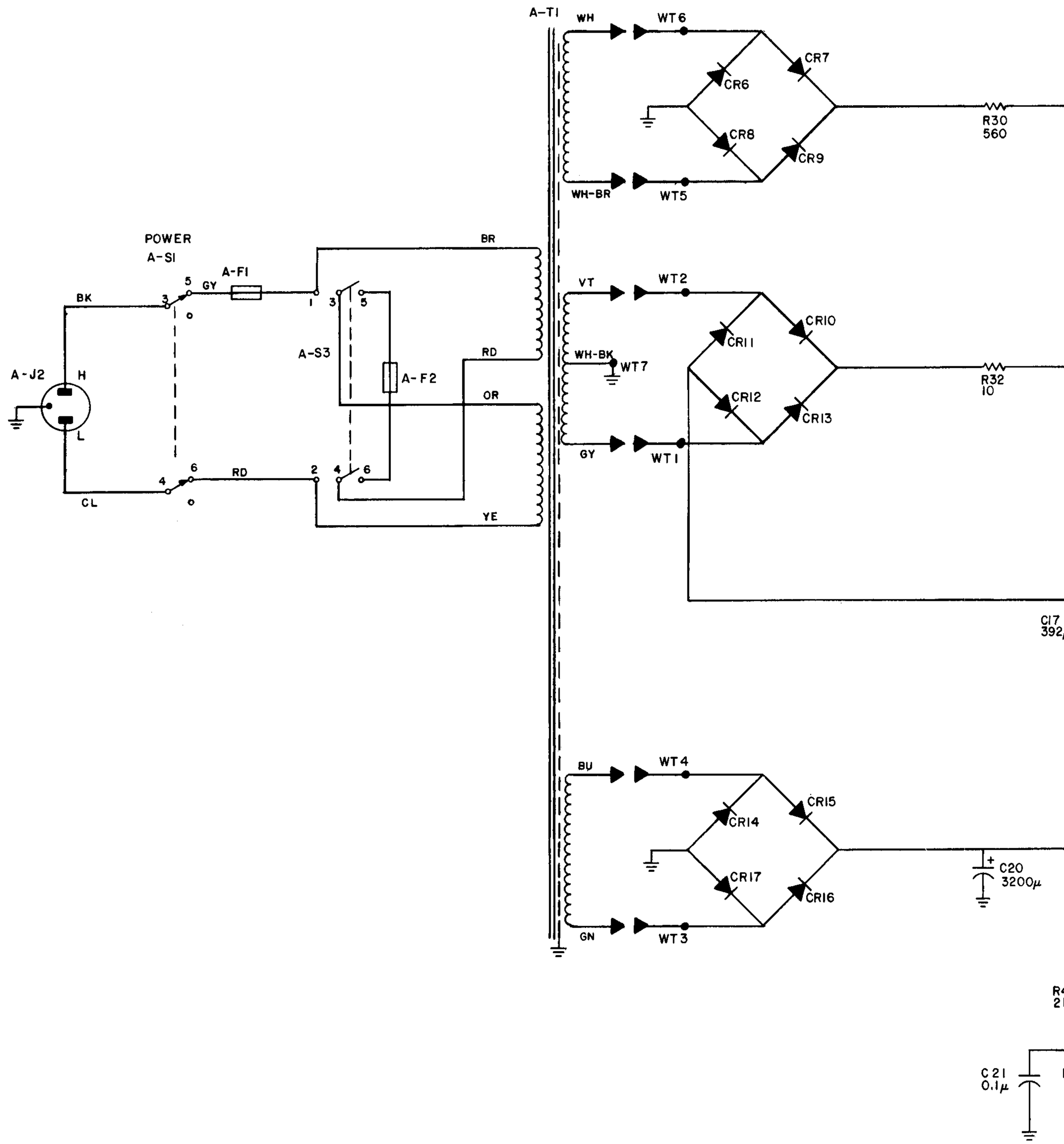

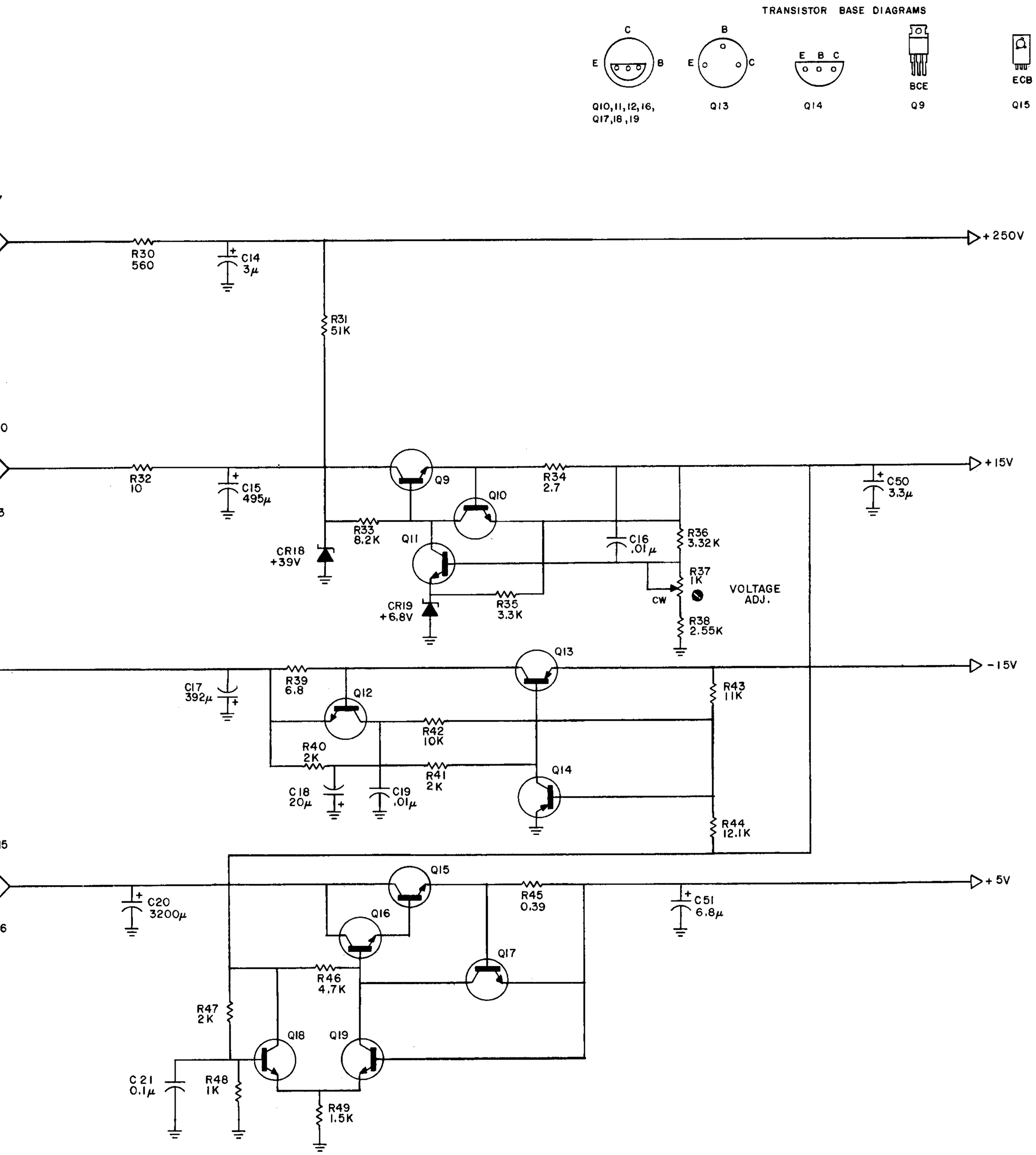

Figure 6-6. Power supply schematic diagram. **B1**

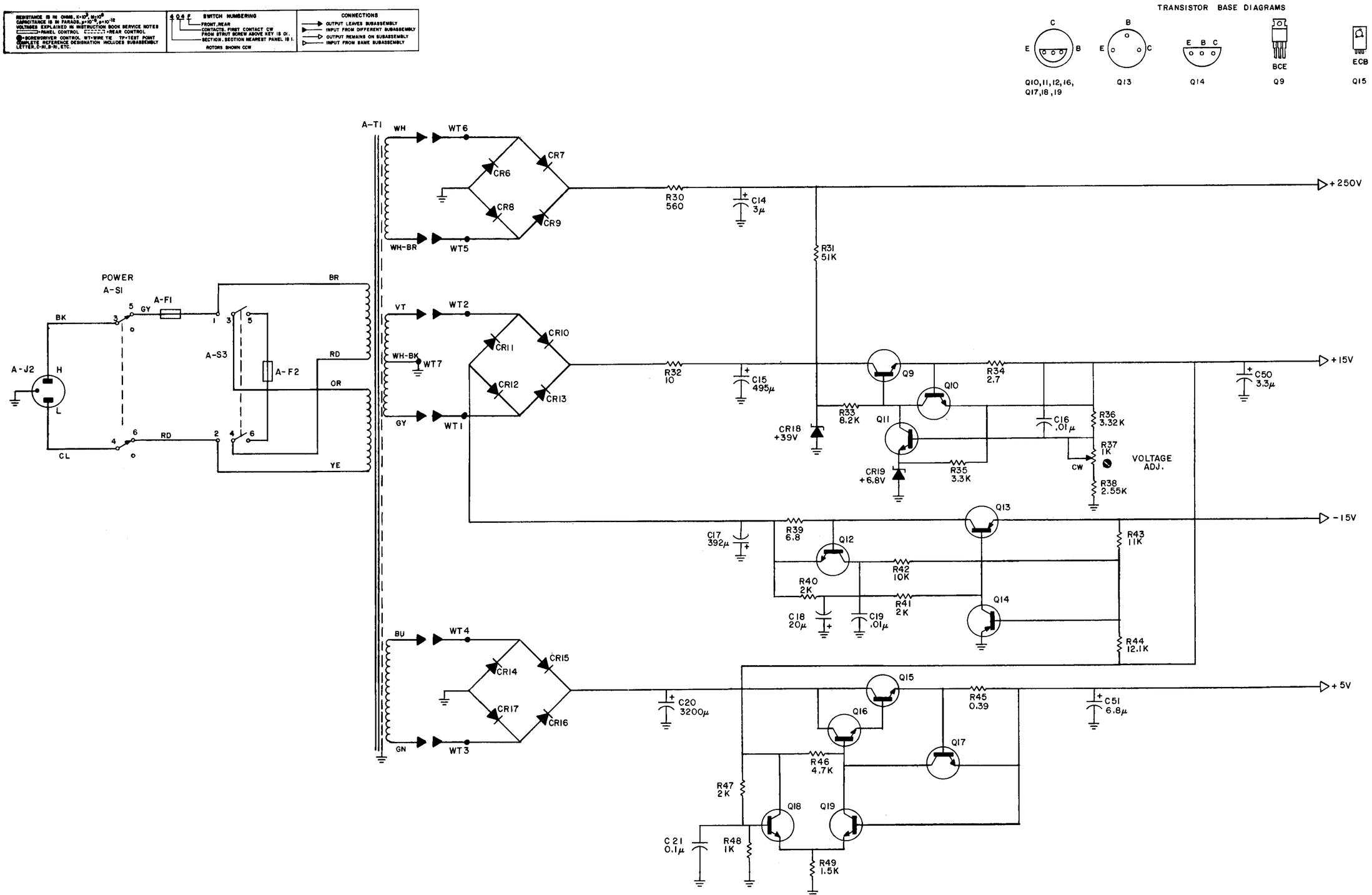

Figure 6-6. Power supply schematic diagram. **B1**

Ref Des	Description	GR Part No.	Fed Mfg Code	Mfg Part No.	Fed Stock No.
B-CR20	Type IN3604	6082-1001	24446	IN3604	5961-995-2199
B-CR21	Type IN4009	6082-1012	24446	IN4009	5961-892-8700
B-CR22	Type IN995	6082-1002	80368	IN995	
B-CR23	Type IN4009	6082-1012	24446	IN4009	5961-892-8700
B-CR24	Type IN4009	6082-1012	24446	IN4009	5961-892-8700
B-CR25	Type IN4009	6082-1012	24446	IN4009	5961-892-8700
B-CR26	Type IN4009	6082-1012	24446	IN4009	5961-892-8700
B-CR27	Type IN4009	6082-1012	24446	IN4009	5961-892-8700
B-CR28	Type IN3604	6082-1001	24446	IN3604	5961-995-2199
B-CR29	Type IN3604	6082-1001	24446	IN3604	5961-995-2199
B-CR30	Type IN995	6082-1002	80368	IN995	
B-CR31	Type IN3604	6082-1001	24446	IN3604	5961-995-2199
B-CR32	Type IN995	6082-1002	80368	IN995	
B-CR33	Type IN995	6082-1002	80368	IN995	
B-CR34	Type IN4009	6082-1012	24446	IN4009	5961-892-8700
B-CR35	Type IN4009	6082-1012	24446	IN4009	5961-892-8700
B-CR36	Type IN995	6082-1002	80368	IN995	
B-CR37	Type IN995	6082-1002	80368	IN995	
B-CR38	Type IN995	6082-1002	80368	IN995	
B-CR39	Type IN3604	6082-1001	24446	IN3604	5961-995-2199
INDUCTORS					
B-L1	Molded, 22 μ H ±10%	4300-2600	99800	1537, 22 μH ±10%	5950-668-5867
B-L2	Inductor Asm.	1192-2000	24655	1192-2000	
B-L3	3.3 μH ±10%	4300-1401	99800	1537, 3.3 μH ±10%	
INTEGRATED CIRCUITS					
B-IC1	Digital, Type SN7490N	5431-8190	01295	SN7490N	
B-IC2	Digital, Type SN7490N	5431-8190	01295	SN7490N	
B-IC3	Digital, Type SN7490N	5431-8190	01295	SN7490N	
B-IC4	Digital, Type SG83-03	5431-9603	93332	SG83-03	
B-IC5	Digital, Type DTμL-936	5431-9362	07263	DTμL-936	
B-IC6	Digital, Type SN7476N	5431-8176	01295	SN7476N	
B-IC7	Digital, Type SN74H00N	5431-8200	01295	SN74H00N	
B-IC8	Digital, Type DTμL-932	5431-9322	07263	DTμL-932	
B-IC9	Digital, Type DTμL-948	5431-9482	07263	DTμL-948	
CRYSTAL					
B-X1	Piezo, 5 MHz	5075-5701	24655	5075-5700	
TRANSISTORS					
B-Q1	Type 2N4275	8210-1126	23342	2N4275	
B-Q2	Type 2N4275	8210-1126	23342	2N4275	
B-Q3	Type 2N4275	8210-1126	23342	2N4275	
B-Q4	Type 2N3905	8210-1114	04713	2N3905	
B-Q5	Type 2N4275	8210-1126	23342	2N4275	
B-Q6	Type 2N4275	8210-1126	23342	2N4275	
B-Q7	Type 2N4275	8210-1126	23342	2N4275	
B-Q8	Type 2N4275	8210-1126	23342	2N4275	
B-Q9	Type TIP29	1192-8100	24655	1192-8100	
B-Q10	Type 2N3414	8210-1047	24446	2N3414	5961-989-2749
B-Q11	Type 2N3414	8210-1047	24446	2N3414	5961-989-2749
B-Q12	Type 2N3414	8210-1047	24446	2N3414	5961-989-2749
B-Q13	Type TIP30	8210-1191	01295	TIP30	
B-Q14	Type 2N4125	8210-1125	93916	2N4125	
B-Q15	Type MJE3055	1192-8110	24655	1192-8110	
B-Q16	Type 2N3414	8210-1047	24446	2N3414	5961-989-2749
B-Q17	Type 2N3414	8210-1047	24446	2N3414	5961-989-2749
B-Q18	Type 2N3414	8210-1047	24446	2N3414	5961-989-2749
B-Q19	Type 2N3414	8210-1047	24446	2N3414	5961-989-2749
B-Q20	Type 2N5189	8210-1163	06111	2N4258	
B-Q21	Type 2N3391A	8210-1092	24454	2N3391A	
B-Q22	Type 2N3414	8210-1047	24446	2N3414	5961-989-2749
B-Q23	Type 2N4125	8210-1125	93916	2N4125	
B-Q24	Type DN259	8210-1170	17856	DN259	
B-Q25	Type 2N4258	8210-1136	93916	2N4258	
B-Q26	Type 2N4258	8210-1136	93916	2N4258	
B-Q27	Type 2N3563	8210-1066	07263	2N3563	
B-Q28	Type 2N3563	8210-1066	07263	2N3563	
B-Q31	Type 2N3414	8210-1047	24446	2N3414	5961-989-2749

ELECTRICAL PARTS LIST (cont)

Ref Des	Description	GR Part No.	Fed Mfg Code	Mfg Part No.	Fed Stock No.
RESISTORS					
B-R1	Comp., 56 kΩ ±5% 1/4 W	6099-3565	75042	BTS, 56 kΩ ±5%	5905-800-0179
B-R2	Comp., 3.3 kΩ ±10% 1/4 W	6099-2339	75042	BTS, 3.3 kΩ ±10%	
B-R3	Comp., 100 Ω ±5% 1/4 W	6099-1105	75042	BTS, 100 Ω ±5%	
B-R4	Comp., 470Ω ±5% 1/4 W	6099-1475	75042	BTS, 470 Ω ±5%	5905-683-2242
B-R5	Comp., 1 kΩ ±10% 1/4 W	6099-2109	75042	BTS, 1 kΩ ±10%	
B-R6	Comp., 4.7 kΩ ±10% 1/4 W	6099-2479	75042	BTS, 4.7 kΩ ±10%	
B-R7	Comp., 330 Ω ±5% 1/4 W	6099-1335	75042	BTS, 330 Ω ±5%	5905-686-3369
B-R8	Comp., 820 Ω±5% 1/4 W	6099-1825	75042	BTS, 820 Ω ±5%	
B-R9	Comp., 2.4 kΩ ±5% 1/4 W	6099-2245	75042	BTS, 2.4 kΩ ±5%	5905-683-7724
B-R10	Comp., 11 kΩ ±5% 1/4 W	6099-3115	75042	BTS, 11 kΩ ±5%	
B-R11	Comp., 560 Ω ±10% 1/4 W	6099-1569	75042	BTS, 560 Ω ±10%	
B-R12	Comp., 150 Ω ±5% 1/4 W	6099-1155	75042	BTS, 150 Ω ±5%	5905-683-2243
B-R13	Comp., 33 kΩ ±5% 1/4 W	6099-3335	75042	BTS, 33 kΩ ±5%	
B-R14	Comp., 6.8 kΩ ±5% 1/4 W	6099-2685	75042	BTS, 6.8 kΩ ±5%	5905-686-9997
B-R15	Comp., 3.3 kΩ ±10% 1/4 W	6099-2339	75042	BTS, 3.3 kΩ ±10%	
B-R16	Comp., 4.7 kΩ ±10% 1/4 W	6099-2479	75042	BTS, 4.7 k ±10%	
B-R17	Comp., 4.7 kΩ ±10% 1/4 W	6099-2479	75042	BTS, 4.7 k ±10%	
B-R18	Comp., 1 kΩ ±10% 1/4 W	6099-2109	75042	BTS, 1 kΩ ±10%	
B-R19	Comp., 10 kΩ ±10% 1/4 W	6099-3109	75042	BTS, 10 kΩ ±10%	
B-R20	Comp., 28.7 kΩ ±5% 1/4 W	6250-2287	75042	CEA, 28.7 kΩ ±1%	5905-691-0572
B-R21	Comp., 27.4 kΩ ±1% 1/4 W	6250-2274	75042	CEA, 27.4 kΩ 1%	5905-702-0541
B-R22	Comp., 4.3 kΩ ±5% 1/4 W	6099-2435	75042	BTS, 4.3 kΩ 5%	
B-R23	Comp., 330 Ω ±5% 1/4 W	6099-1335	75042	BTS, 360 Ω 5%	
B-R24	Comp., 8.2 kΩ ±5% 1/4 W	6099-2825	01121	RC20GF8225	5905-299-1971
B-R25	Film, 3.6 kΩ ±5% 1/4 W	6099-2365	01121	BTS, 3.6 kΩ 5%	5905-577-0627
B-R26	Comp., 470 Ω ±5% 1/4 W	6099-1475	75042	BTS, 470 Ω 5%	5905-683-2242
B-R27	Comp., 330 Ω ±5% 1/4 W	6099-1335	75042	BTS, 470 Ω 5%	
B-R28	Comp., 4.7 kΩ ±5% 1/4 W	6099-2475	75042	BTS, 4.7 kΩ 5%	
B-R29	Comp., 220 Ω ±5% 1/4 W	6099-1229	75042	BTS, 220 Ω 5%	
B-R30	Comp., 560 Ω ±10% 2 W	6120-1569	01121	HB, 560 Ω 10%	
B-R31	Comp., 51 kΩ ±5% 2 W	6120-3515	01121	RC20GF513J	5905-279-3496
B-R32	Comp., 10 Ω ±5% 1/2 W	6100-0105	01121	RC20GF100J	5905-190-8883
B-R33	Comp., 8.2 kΩ ±5% 1/2 W	6100-2825	01121	RC20GF822J	5905-299-1971
B-R34	Comp., 2.7 Ω ±5% 1/4 W	6099-9275	75042	BTS, 2.7 Ω 5%	
B-R35	Comp., 3.3 kΩ ±10% 1/4 W	6099-2339	75042	BTS, 3.3 kΩ 10%	
B-R36	Film, 3.32 kΩ ±1% 1/8 W	6250-1332	75042	CEA, 3.32 kΩ 1%	
B-R37	Pot., Comp. 1 kΩ ±10%	6056-0138	11236	115, 1 kΩ 10%	
B-R38	Film, 2.55 kΩ ±1% 1/8 W	6250-1255	75042	CEA, 2.55 kΩ 1%	
B-R39	Comp., 6.8 Ω ±5% 1/4 W	6099-9685	75042	BTS, 6.8 Ω 5%	
B-R40	Comp., 2 kΩ ±5% 1/4 W	6099-2205	75042	BTS, 2 kΩ 5%	5905-279-4629
B-R41	Comp., 2 kΩ ±5% 1/4 W	6099-2205	75042	BTS, 2 kΩ 5%	5905-279-4629
B-R42	Comp., 10 kΩ ±10% 1/4 W	6099-3109	75042	BTS, 10 kΩ 10%	
B-R43	Film, 11 kΩ ±1% 1/8 W	6250-2110	75042	CEA, 11 kΩ 1%	5905-681-4941
B-R44	Film, 12.1 kΩ ±1% 1/8 W	6250-2121	75042	CEA, 12.1 kΩ 1%	
B-R45	Voltage, 0.39 Ω ±5%	6760-8395	75042	BWH, 0.39 Ω 5%	
B-R46	Comp., 4.7 kΩ ±10% 1/4 W	6099-2479	75042	BTS, 4.7 kΩ 10%	
B-R47	Film, 2 kΩ ±1% 1/4 W	6350-1200	75042	CEB, 2 kΩ 1%	5905-538-3516
B-R48	Film, 1 kΩ ±1% 1/4 W	6350-1100	75042	CEB, 1 kΩ 1%	5905-892-7018
B-R49	Comp., 1.5 kΩ ±10% 1/4 W	6099-2159	75042	BTS, 1.5 kΩ 10%	
B-R50	Comp., 1 kΩ ±10% 1/4 W	6099-2109	75042	BTS, 1 kΩ 10%	
B-R51	Comp., 4,7 kΩ ±10% 1/4 W	6099-2479	75042	BTS, 4.7 kΩ 10%	
B-R52	Comp., 4.7 kΩ ±10% 1/4 W	6099-2479	75042	BTS, 4,7 kΩ 10%	
B-R53	Comp., 4.7 kΩ ±10% 1/4 W	6099-2479	75042	BTS, 4.7 kΩ 10%	
B-R54	Comp., 4.7 kΩ ±10% 1/4 W	6099-2479	75042	BTS, 4.7 kΩ 10%	
B-R55	Comp., 1.2 kΩ ±10% 1/4 W	6099-2129	75042	BTS, 1.2 kΩ 10%	
B-R56	Comp., 10 kΩ ±10% 1/4 W	6099-3109	75042	BTS, 10 kΩ 10%	
B-R57	Comp., 270 Ω ±10% 1/4 W	6099-1279	75042	BTS, 270 Ω 10%	
B-R58	Comp., 1 kΩ ±10% 1/4 W	6099-2109	75042	BTS, 1 kΩ 10%	
B-R59	Comp., 1 MΩ ±10% 1/4 W	6099-5109	75042	BTS, 1 MΩ 10%	
B-R60	Comp., 4.7 kΩ ±10% 1/4 W	6099-2479	75042	BTS, 4.7 kΩ 10%	
B-R61	Comp., 15 Ω ±10% 1/4 W	6099-0159	75042	BTS, 15 Ω 10%	
B-R62	Comp., 470 Ω ±10% 1 W	6110-1479	01121	GF, 470 Ω 10%	
B-R63	Comp., 470 Ω ±5% 1/4 W	6099-1475	75042	BTS, 470 Ω 5%	5905-683-2242
B-R64	Comp., 4.7 kΩ ±10% 1/4 W	6099-2479	75042	BTS, 4.7 kΩ 10%	
B-R65	Comp., 1.8 kΩ ±10% 1/4 W	6099-2189	75042	BTS, 1.8 kΩ 10%	
B-R66	Comp., 4.7 kΩ ±10% 1/4 W	6099-2479	75042	BTS, 4.7 kΩ 10%	
B-R67	Comp., 47 kΩ ±10% 1/4 W	6099-3479	75042	BTS, 47 kΩ 10%	
B-R68	Comp., 1 MΩ ±5% 1/4 W	6099-5105	75042	BTS, 1 MΩ 5%	
B-R69	Comp., 33 kΩ ±5% 1/4 W	6099-3335	75042	BTS, 33 kΩ 5%	
B-R70	Comp., 1 kΩ ±5% 1/4 W	6099-2105	75042	BTS, 1 kΩ 5%	5905-681-6462
B-R71	Comp., 1 kΩ ±5% 1/4 W	6099-2105	75042	BTS, 1 kΩ 5%	5905-681-6462
B-R72	Comp., 100 kΩ ±5% 1/4 W	6099-4105	75042	BTS, 100 kΩ 5%	5905-686-3129
B-R73	Comp., 47 kΩ ±10% 1/4 W	6099-3479	75042	BTS, 47 kΩ 5%	
B-R74	Comp., 91 Ω ±5% 1/4 W	6099-0915	75042	BTS, 91 Ω 5%	

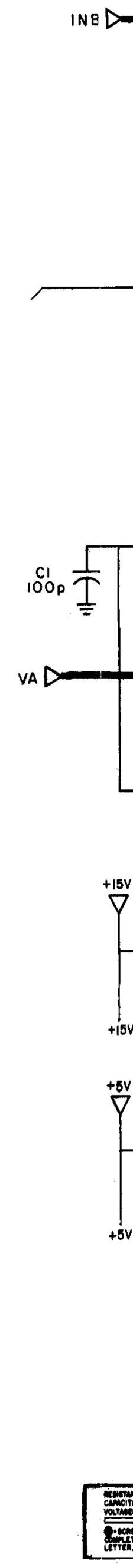

Blank Page

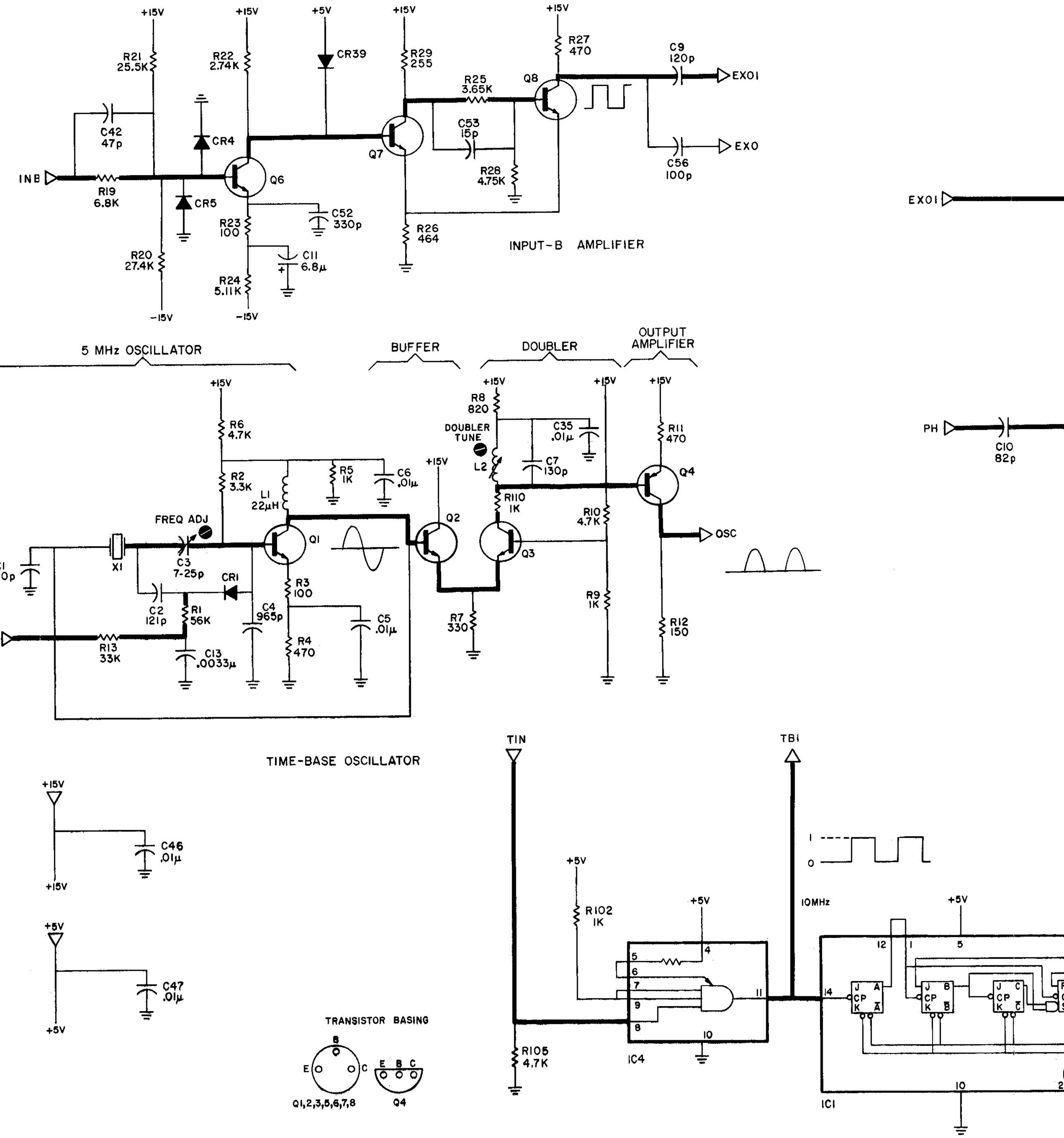

RESISTANCE IS IN OHMS, K=10³, M=10⁶
CAPACITANCE IS IN FARADS, μ=10⁻⁶, p=10⁻¹²
VOLTAGES EXPLAINED IN INSTRUCTION BOOK SERVICE NOTES
▭=PANEL CONTROL ⬚=REAR CONTROL
●=SCREWDRIVER CONTROL WT=WIRE TIE TP=TEST POINT
COMPLETE REFERENCE DESIGNATION INCLUDES SUBASSEMBLY LETTER, C-R1, B-R1, ETC.

SWITCH NUMBERING
4 Q 4 F
FRONT, REAR
CONTACTS. FIRST CONTACT CW FROM STRUT SCREW ABOVE KEY IS .01.
SECTION. SECTION NEAREST PANEL IS 1.
ROTORS SHOWN CCW

CONNECTIONS
OUTPUT LEAVES SUBASSEMBLY
INPUT FROM DIFFERENT SUBASSEMBLY
OUTPUT REMAINS ON SUBASSEMBLY
INPUT FROM SAME SUBASSEMBLY

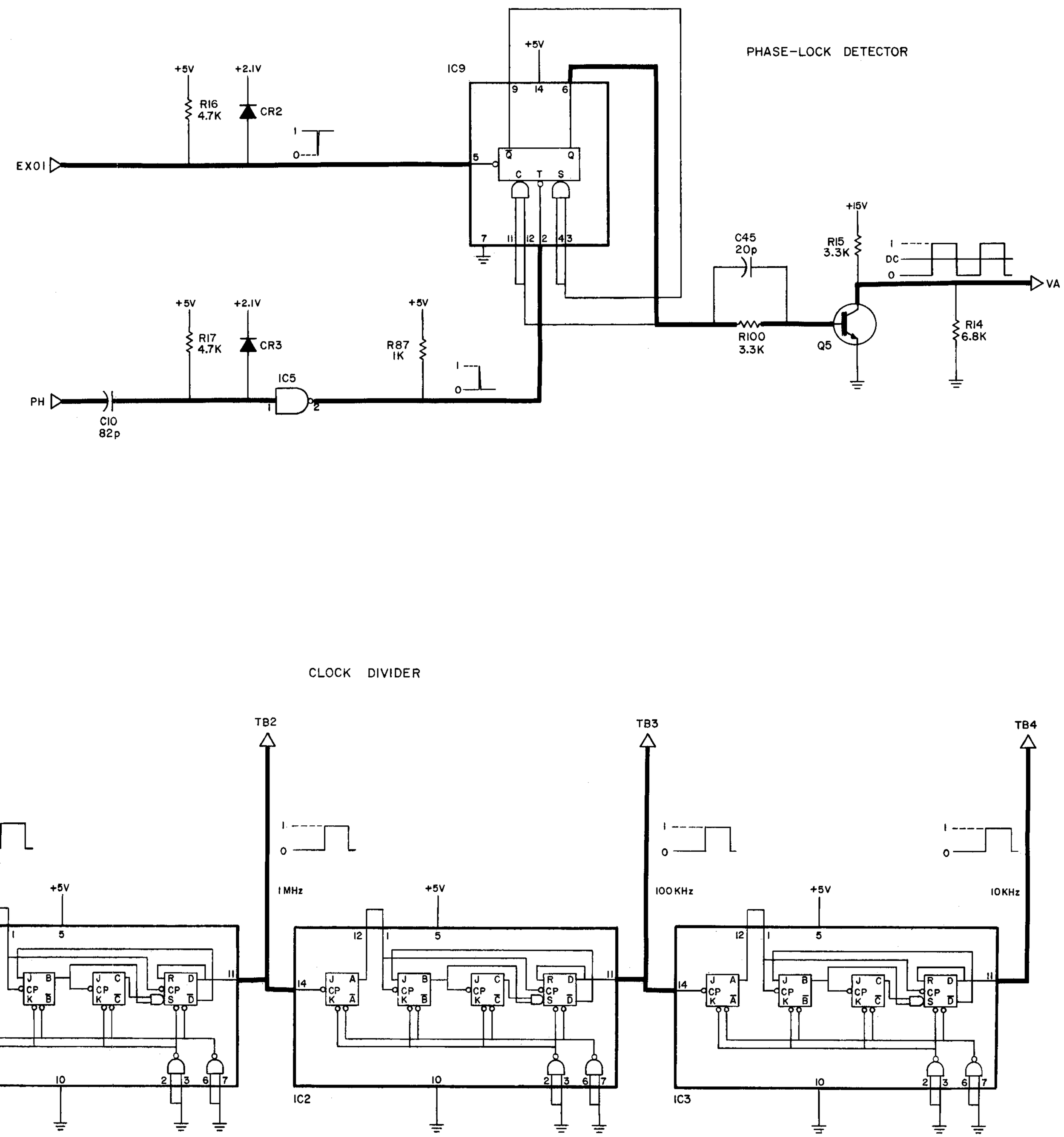

Figure 6-7. Input B, time-base oscillator, phase-lock detector and clock divider schematic diagrams. **B2**

ELECTRICAL PARTS LIST (cont)

Ref Des	Description	GR Part No.	Fed Mfg Code	Mfg Part No.	Fed Stock No.
RESISTORS					
B-R1	Comp., 56 kΩ ±5% 1/4 W	6099-3565	75042	BTS, 56 kΩ ±5%	5905-800-0179
B-R2	Comp., 3.3 kΩ ±10% 1/4 W	6099-2339	75042	BTS, 3.3 kΩ ±10%	
B-R3	Comp., 100 Ω ±5% 1/4 W	6099-1105	75042	BTS, 100 Ω ±5%	
B-R4	Comp., 470Ω ±5% 1/4 W	6099-1475	75042	BTS, 470 Ω ±5%	5905-683-2242
B-R5	Comp., 1 kΩ ±10% 1/4 W	6099-2109	75042	BTS, 1 kΩ ±10%	
B-R6	Comp., 4.7 kΩ ±10% 1/4 W	6099-2479	75042	BTS, 4.7 kΩ ±10%	
B-R7	Comp., 330 Ω ±5% 1/4 W	6099-1335	75042	BTS, 330 Ω ±5%	5905-686-3369
B-R8	Comp., 820 Ω±5% 1/4 W	6099-1825	75042	BTS, 820 Ω ±5%	
B-R9	Comp., 2.4 kΩ ±5% 1/4 W	6099-2245	75042	BTS, 2.4 kΩ ±5%	5905-683-7724
B-R10	Comp., 11 kΩ ±5% 1/4 W	6099-3115	75042	BTS, 11 kΩ ±5%	
B-R11	Comp., 560 Ω ±10% 1/4 W	6099-1569	75042	BTS, 560 Ω ±10%	
B-R12	Comp., 150 Ω ±5% 1/4 W	6099-1155	75042	BTS, 150 Ω ±5%	5905-683-2243
B-R13	Comp., 33 kΩ ±5% 1/4 W	6099-3335	75042	BTS, 33 kΩ ±5%	
B-R14	Comp., 6.8 kΩ ±5% 1/4 W	6099-2685	75042	BTS, 6.8 kΩ ±5%	5905-686-9997
B-R15	Comp., 3.3 kΩ ±10% 1/4 W	6099-2339	75042	BTS, 3.3 kΩ ±10%	
B-R16	Comp., 4.7 kΩ ±10% 1/4 W	6099-2479	75042	BTS, 4.7 k ±10%	
B-R17	Comp., 4.7 kΩ ±10% 1/4 W	6099-2479	75042	BTS, 4.7 k ±10%	
B-R18	Comp., 1 kΩ ±10% 1/4 W	6099-2109	75042	BTS, 1 kΩ ±10%	
B-R19	Comp., 10 kΩ ±10% 1/4 W	6099-3109	75042	BTS, 10 kΩ ±10%	
B-R20	Comp., 28.7 kΩ ±5% 1/4 W	6250-2287	75042	CEA, 28.7 kΩ ±1%	5905-691-0572
B-R21	Comp., 27.4 kΩ ±1% 1/4 W	6250-2274	75042	CEA, 27.4 kΩ 1%	5905-702-0541
B-R22	Comp., 4.3 kΩ ±5% 1/4 W	6099-2435	75042	BTS, 4.3 kΩ 5%	
B-R23	Comp., 330 Ω ±5% 1/4 W	6099-1335	75042	BTS, 360 Ω 5%	
B-R24	Comp., 8.2 kΩ ±5% 1/4 W	6099-2825	01121	RC20GF8225	5905-299-1971
B-R25	Film, 3.6 kΩ ±5% 1/4 W	6099-2365	01121	BTS, 3.6 kΩ 5%	5905-577-0627
B-R26	Comp., 470 Ω ±5% 1/4 W	6099-1475	75042	BTS, 470 Ω 5%	5905-683-2242
B-R27	Comp., 330 Ω ±5% 1/4 W	6099-1335	75042	BTS, 470 Ω 5%	
B-R28	Comp., 4.7 kΩ ±5% 1/4 W	6099-2475	75042	BTS, 4.7 kΩ 5%	
B-R29	Comp., 220 Ω ±5% 1/4 W	6099-1229	75042	BTS, 220 Ω 5%	
B-R30	Comp., 560 Ω ±10% 2 W	6120-1569	01121	HB, 560 Ω 10%	
B-R31	Comp., 51 kΩ ±5% 2 W	6120-3515	01121	RC20GF513J	5905-279-3496
B-R32	Comp., 10 Ω ±5% 1/2 W	6100-0105	01121	RC20GF100J	5905-190-8883
B-R33	Comp., 8.2 kΩ ±5% 1/2 W	6100-2825	01121	RC20GF822J	5905-299-1971
B-R34	Comp., 2.7 Ω ±5% 1/4 W	6099-9275	75042	BTS, 2.7 Ω 5%	
B-R35	Comp., 3.3 kΩ ±10% 1/4 W	6099-2339	75042	BTS, 3.3 kΩ 10%	
B-R36	Film, 3.32 kΩ ±1% 1/8 W	6250-1332	75042	CEA, 3.32 kΩ 1%	
B-R37	Pot., Comp. 1 kΩ ±10%	6056-0138	11236	115, 1 kΩ 10%	
B-R38	Film, 2.55 kΩ ±1% 1/8 W	6250-1255	75042	CEA, 2.55 kΩ 1%	
B-R39	Comp., 6.8 Ω ±5% 1/4 W	6099-9685	75042	BTS, 6.8 Ω 5%	
B-R40	Comp., 2 kΩ ±5% 1/4 W	6099-2205	75042	BTS, 2 kΩ 5%	5905-279-4629
B-R41	Comp., 2 kΩ ±5% 1/4 W	6099-2205	75042	BTS, 2 kΩ 5%	5905-279-4629
B-R42	Comp., 10 kΩ ±10% 1/4 W	6099-3109	75042	BTS, 10 kΩ 10%	
B-R43	Film, 11 kΩ ±1% 1/8 W	6250-2110	75042	CEA, 11 kΩ 1%	5905-681-4941
B-R44	Film, 12.1 kΩ ±1% 1/8 W	6250-2121	75042	CEA, 12.1 kΩ 1%	
B-R45	Voltage, 0.39 Ω ±5%	6760-8395	75042	BWH, 0.39 Ω 5%	
B-R46	Comp., 4.7 kΩ ±10% 1/4 W	6099-2479	75042	BTS, 4.7 kΩ 10%	
B-R47	Film, 2 kΩ ±1% 1/4 W	6350-1200	75042	CEB, 2 kΩ 1%	5905-538-3516
B-R48	Film, 1 kΩ ±1% 1/4 W	6350-1100	75042	CEB, 1 kΩ 1%	5905-892-7018
B-R49	Comp., 1.5 kΩ ±10% 1/4 W	6099-2159	75042	BTS, 1.5 kΩ 10%	
B-R50	Comp., 1 kΩ ±10% 1/4 W	6099-2109	75042	BTS, 1 kΩ 10%	
B-R51	Comp., 4.7 kΩ ±10% 1/4 W	6099-2479	75042	BTS, 4.7 kΩ 10%	
B-R52	Comp., 4.7 kΩ ±10% 1/4 W	6099-2479	75042	BTS, 4.7 kΩ 10%	
B-R53	Comp., 4.7 kΩ ±10% 1/4 W	6099-2479	75042	BTS, 4.7 kΩ 10%	
B-R54	Comp., 4.7 kΩ ±10% 1/4 W	6099-2479	75042	BTS, 4.7 kΩ 10%	
B-R55	Comp., 1.2 kΩ ±10% 1/4 W	6099-2129	75042	BTS, 1.2 kΩ 10%	
B-R56	Comp., 10 kΩ ±10% 1/4 W	6099-3109	75042	BTS, 10 kΩ 10%	
B-R57	Comp., 270 Ω ±10% 1/4 W	6099-1279	75042	BTS, 270 Ω 10%	
B-R58	Comp., 1 kΩ ±10% 1/4 W	6099-2109	75042	BTS, 1 kΩ 10%	
B-R59	Comp., 1 MΩ ±10% 1/4 W	6099-5109	75042	BTS, 1 MΩ 10%	
B-R60	Comp., 4.7 kΩ ±10% 1/4 W	6099-2479	75042	BTS, 4.7 kΩ 10%	
B-R61	Comp., 15 Ω ±10% 1/4 W	6099-0159	75042	BTS, 15 Ω 10%	
B-R62	Comp., 470 Ω ±10% 1 W	6110-1479	01121	GF, 470 Ω 10%	
B-R63	Comp., 470 Ω ±5% 1/4 W	6099-1475	75042	BTS, 470 Ω 5%	5905-683-2242
B-R64	Comp., 4.7 kΩ ±10% 1/4 W	6099-2479	75042	BTS, 4.7 kΩ 10%	
B-R65	Comp., 1.8 kΩ ±10% 1/4 W	6099-2189	75042	BTS, 1.8 kΩ 10%	
B-R66	Comp., 4.7 kΩ ±10% 1/4 W	6099-2479	75042	BTS, 4.7 kΩ 10%	
B-R67	Comp., 47 kΩ ±10% 1/4 W	6099-3479	75042	BTS, 47 kΩ 10%	
B-R68	Comp., 1 MΩ ±5% 1/4 W	6099-5105	75042	BTS, 1 MΩ 5%	
B-R69	Comp., 33 kΩ ±5% 1/4 W	6099-3335	75042	BTS, 33 kΩ 5%	
B-R70	Comp., 1 kΩ ±5% 1/4 W	6099-2105	75042	BTS, 1 kΩ 5%	5905-681-6462
B-R71	Comp., 1 kΩ ±5% 1/4 W	6099-2105	75042	BTS, 1 kΩ 5%	5905-681-6462
B-R72	Comp., 100 kΩ ±5% 1/4 W	6099-4105	75042	BTS, 100 kΩ 5%	5905-686-3129
B-R73	Comp., 47 kΩ ±10% 1/4 W	6099-3479	75042	BTS, 47 kΩ 5%	
B-R74	Comp., 91 Ω ±5% 1/4 W	6099-0915	75042	BTS, 91 Ω 5%	

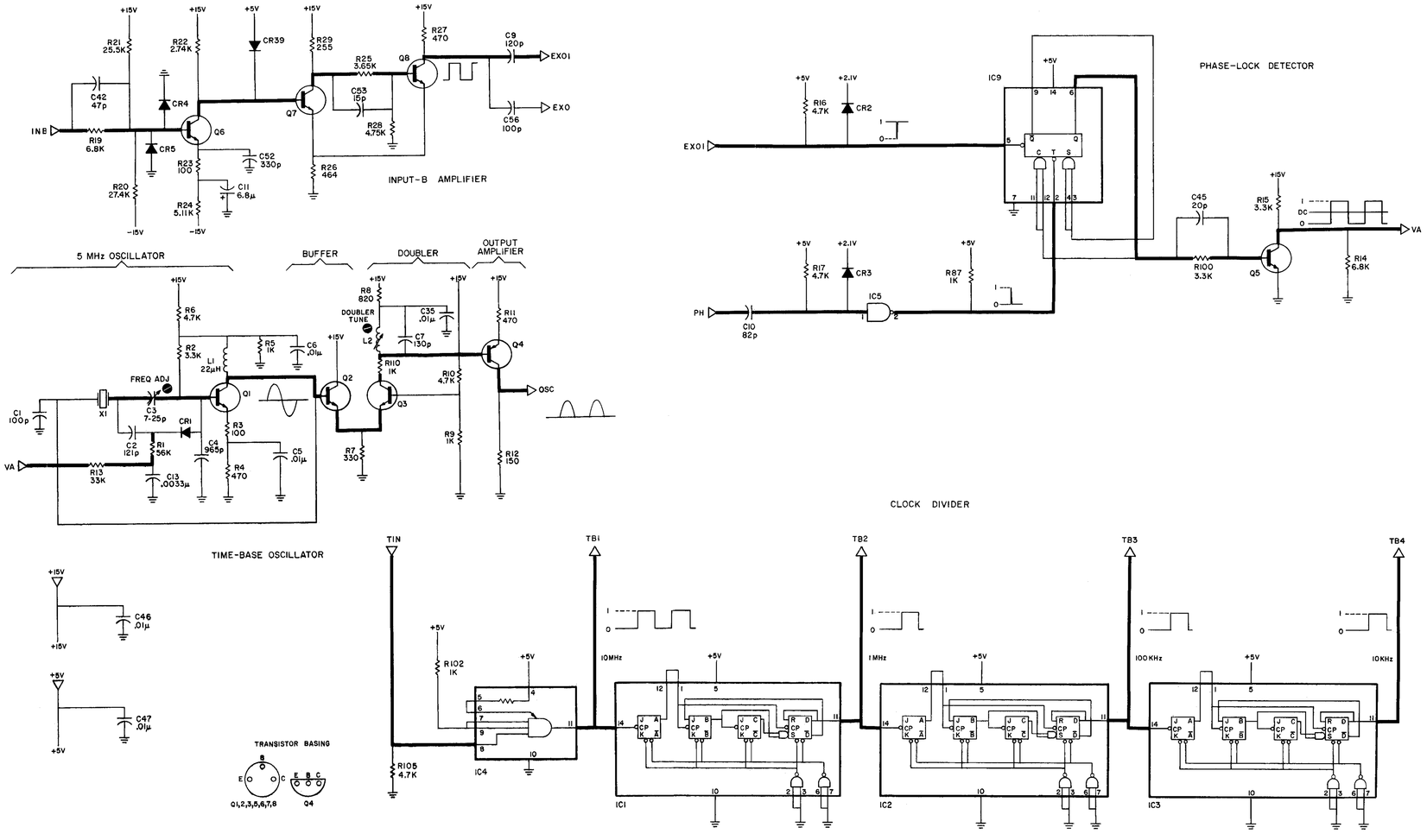

Figure 6-7. Input B, time-base oscillator, phase-lock detector and clock divider schematic diagrams.

B2

Ref Des	Description	GR Part No.	Fed Mfg Code	Mfg Part No.	Fed Stock No.
B-R75	Comp., 91 Ω ±5% 1/4 W	6099-0915	75042	BTS, 91 Ω 5%	
B-R76	Comp., 390 Ω ±5% 1/4 W	6099-1395	75042	BTS, 390 Ω 5%	
B-R77	Pot., Comp., 100 kΩ ±10%	6049-0281	01121	2V1041	
B-R78	Comp., 12 kΩ ±5% 1/4 W	6099-3125	75042	BTS, 12 kΩ 5%	
B-R79	Comp., 62 Ω ±5% 1/4 W	6099-0625	75042	BTS, 62 Ω 5%	
B-R80	Comp., 62 Ω ±5% 1/4 W	6099-0625	75042	BTS, 62 Ω 5%	
B-R81	Comp., 12 kΩ ±5% 1/4 W	6099-3125	75042	BTS, 12 kΩ 5%	
B-R82	Comp., 390 Ω ±5% 1/4 W	6099-1395	75042	BTS, 390 Ω 5%	
B-R83	Comp., 510 Ω ±5% 1/4 W	6099-1515	75042	BTS, 510 Ω 5%	5905-801-8272
B-R84	Comp., 47 Ω ±5% 1/4 W	6099-0475	75042	BTS, 47 Ω 5%	
B-R85	Comp., 47 Ω ±5% 1/4 W	6099-0475	75042	BTS, 47 Ω 5%	
B-R86	Comp., 1 kΩ ±10% 1/4 W	6099-2109	75042	BTS, 1 kΩ 10%	
B-R87	Comp., 1 kΩ ±10% 1/4 W	6099-2109	75042	BTS, 1 kΩ 10%	
B-R88	Comp., 1 kΩ ±10% 1/4 W	6099-2109	75042	BTS, 1 kΩ 10%	
B-R89	Comp., 910 kΩ ±5% 1/4 W	6099-4915	75042	BTS, 910 kΩ 10%	
B-R90	Comp., 110 kΩ ±5% 1/4 W	6099-4115	75042	BTS, 110 kΩ 5%	
B-R91	Comp., 1 MΩ ±5% 1/4 W	6099-5105	75042	BTS, 1 MΩ 5%	
B-R92	Comp., 10 kΩ ±10% 1/4 W	6099-3109	75042	BTS, 10 kΩ 10%	
B-R93	Comp., 1 kΩ ±5% 1/4 W	6099-2105	75042	BTS, 1 kΩ 5%	5905-681-6462
B-R94	Comp., 47 kΩ ±10% 1/4 W	6099-3479	75042	BTS, 47 kΩ 10%	
B-R95	Comp., 4.7 kΩ ±10% 1/4 W	6099-2479	75042	BTS, 4.7 kΩ 10%	
B-R96	Comp., 47 Ω ±10% 1 W	6110-0479	01121	GB, 47 Ω 10%	
B-R97	Comp., 47 Ω ±10% 1 W	6110-0479	01121	GB, 47 Ω 10%	
B-R98	Comp., 4.7 kΩ ±10% 1/4 W	6099-2479	75042	BTS, 4.7 kΩ 10%	
B-R99	Comp., 2 kΩ ±5% 1/4 W	6099-2205	75042	BTS, 2 kΩ 5%	5905-279-4629
B-R100	Comp., 4.7 kΩ ±10% 1/4 W	6099-2479	75042	BTS, 4.7 kΩ 10%	
B-R101	Comp., 150 Ω ±5% 1/4 W	6099-1155	75042	BTS, 150 Ω 5%	5905-683-2243
B-R102	Comp., 1 kΩ ±10% 1/4 W	6099-2109	75042	BTS, 1 kΩ 5%	
B-R103	Comp., 2 kΩ ±5% 1/4 W	6099-2205	75042	BTS, 2 kΩ 5%	5905-279-4629
B-R104	Comp., 1 kΩ ±10% 1/4 W	6099-2109	75042	BTS, 1 kΩ 10%	
B-R105	Comp., 47 Ω ±5% 1/2 W	6100-0475	01121	RC20GF470J	5905-252-4018
B-R106	Comp., 47 Ω ±5% 1/2 W	6100-0475	01121	RC20GF470J	5905-252-4018
B-R107	Comp., 10 Ω ±5% 1/2 W	6100-0105	01121	RC20GF100J	5905-190-8883
B-R108	Comp., 10 kΩ ±10% 1/4 W	6099-3109	75042		
B-R109	4.7 kΩ ±10% 1/4 W	6099-2479	75042	BTS, 4.7 kΩ 10%	
B-R110	1 kΩ ±5% 1/4 W	6099-2105	75042	BTS, 1 kΩ 5%	5905-681-6462
SWITCHES					
B-S1	Push Button, Multiple	7880-1600	24655	7880-1600	
B-S2	Push Button, Multiple	7880-1610	24655	7880-1610	
JACKS					
B-J1	Multiple Socket	4230-1510	02660	57-1393	

INPUT-A CIRCUIT

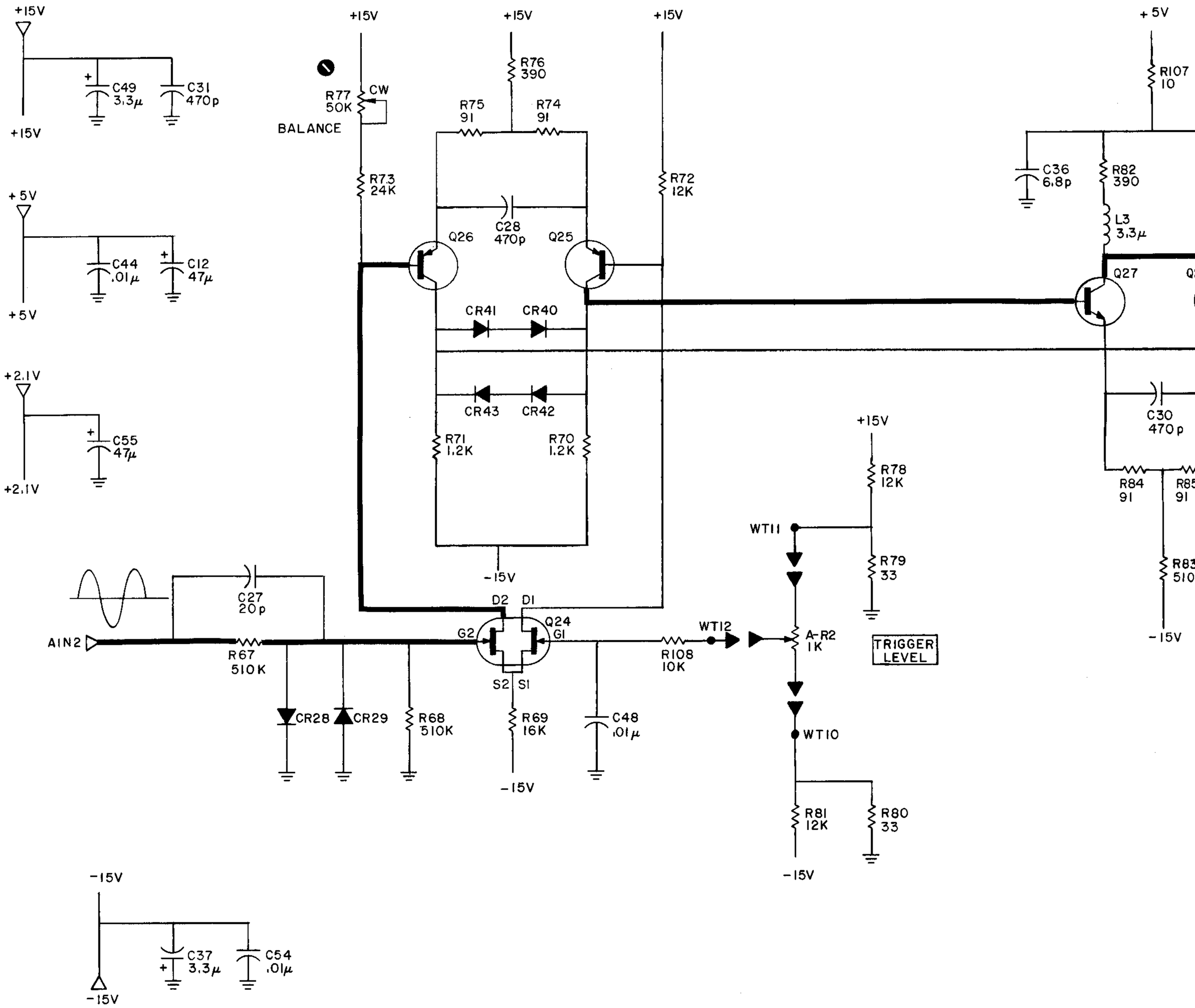

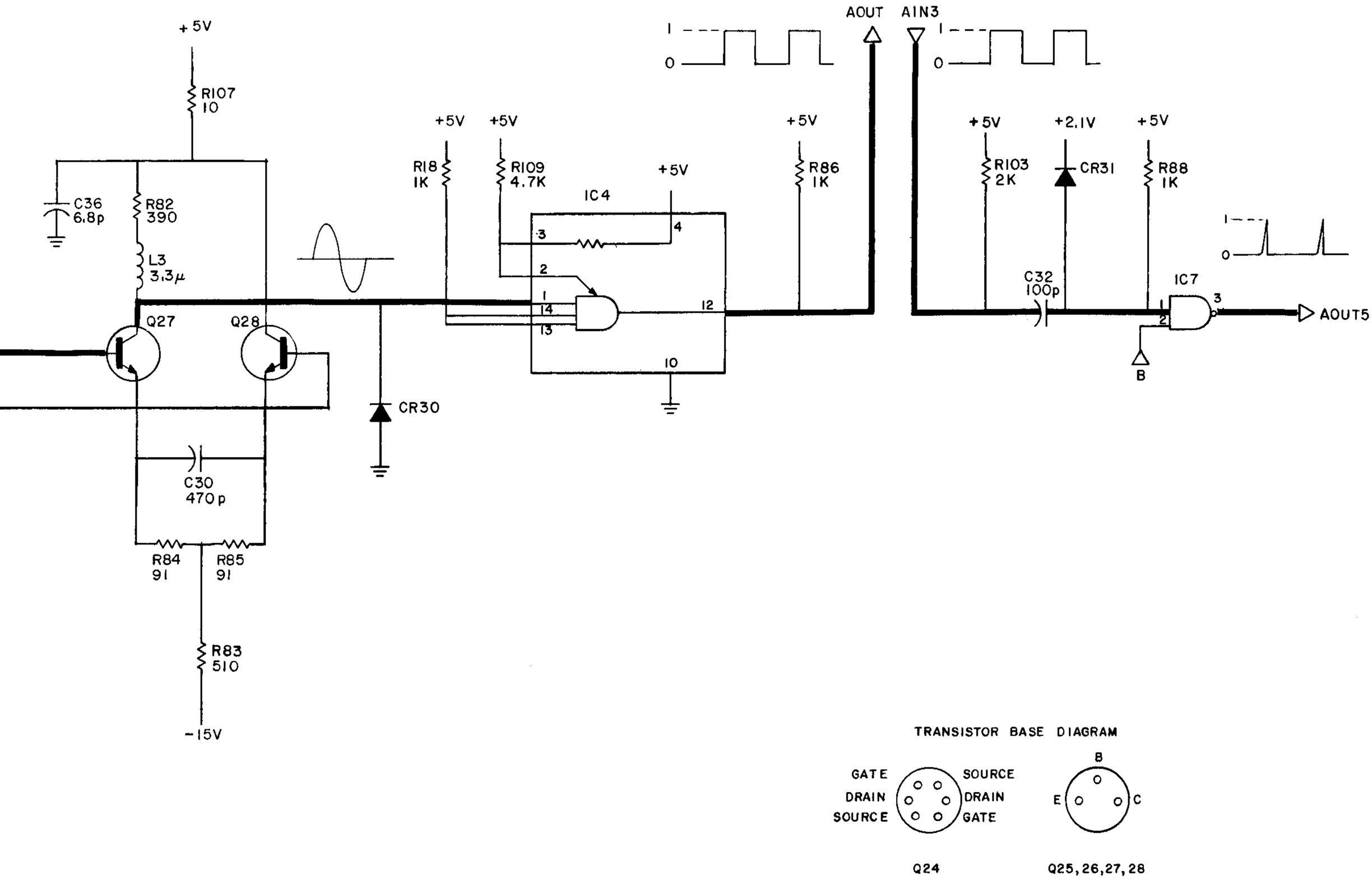

PROGRAM BOARD B

Figure 6-8. Input A schematic diagram. **B3**

INPUT-A CIRCUIT

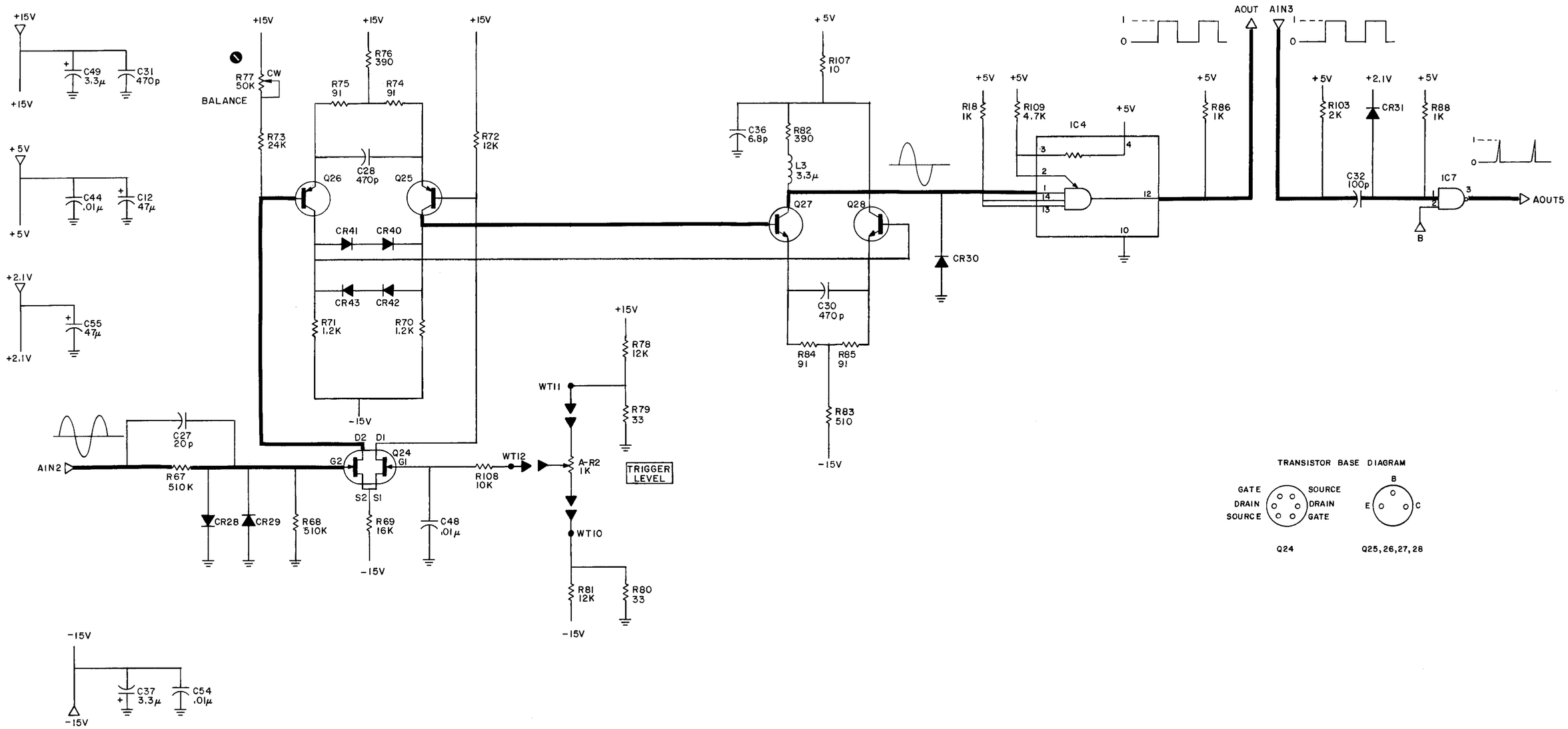

PROGRAM BOARD B

Figure 6-8. Input A schematic diagram. **B3**

RESISTANCE IS IN OHMS, K=10^3, M=10^6
CAPACITANCE IS IN FARADS, μ=10^{-6}, p=10^{-12}
VOLTAGES EXPLAINED IN INSTRUCTION BOOK SERVICE NOTES
▭ = PANEL CONTROL ⬚ = REAR CONTROL
● = SCREWDRIVER CONTROL WT = WIRE TIE TP = TEST POINT
COMPLETE REFERENCE DESIGNATION INCLUDES SUBASSEMBLY LETTER, C-R1, B-R1, ETC.

4 0 4 F SWITCH NUMBERING
F — FRONT, REAR
4 — CONTACTS. FIRST CONTACT CW FROM STRUT SCREW ABOVE KEY IS 01.
0 — SECTION. SECTION NEAREST PANEL IS 1.
ROTORS SHOWN CCW

CONNECTIONS
→ OUTPUT LEAVES SUBASSEMBLY
▶ INPUT FROM DIFFERENT SUBASSEMBLY
→ OUTPUT REMAINS ON SUBASSEMBLY
▷ INPUT FROM SAME SUBASSEMBLY

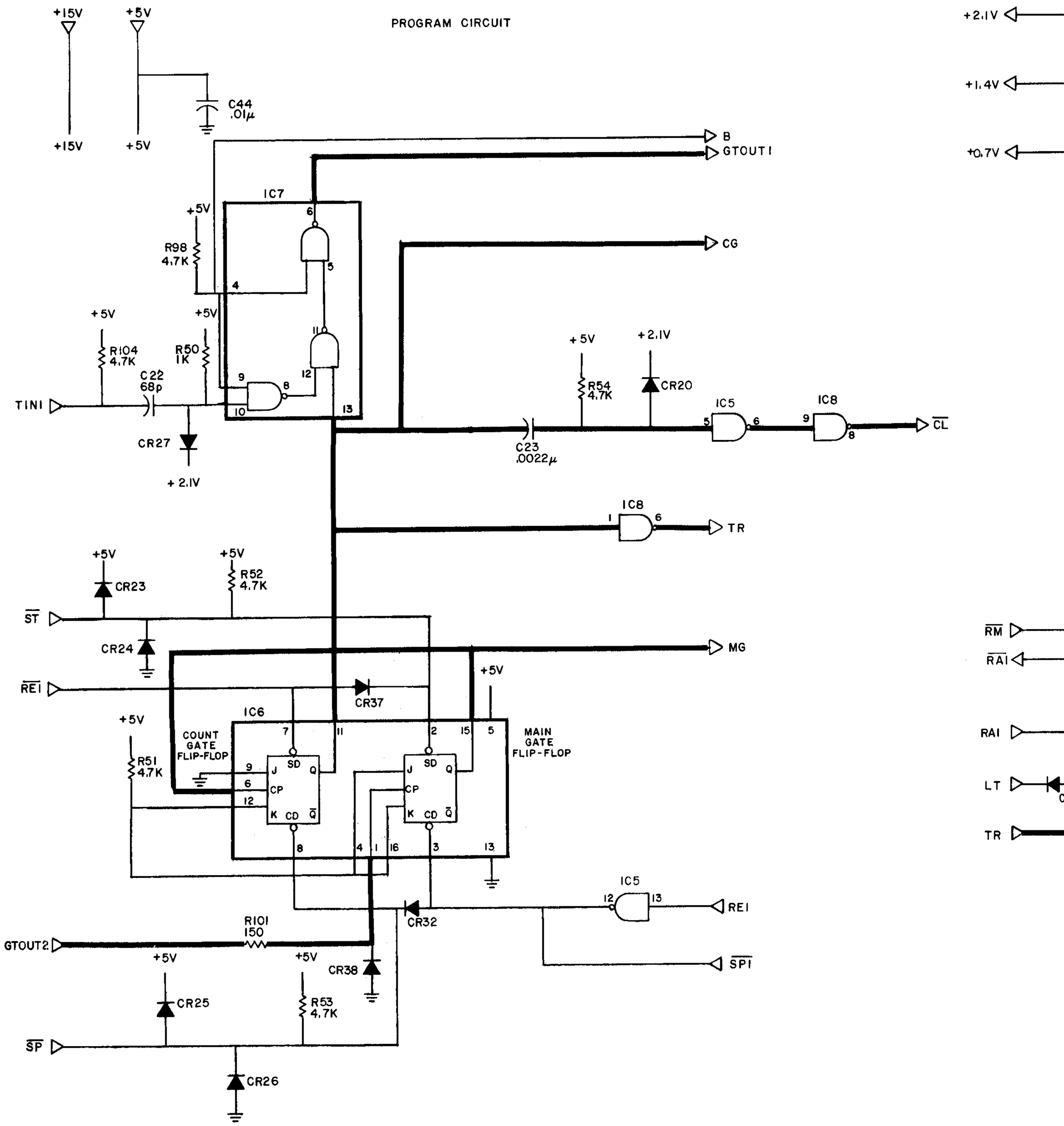

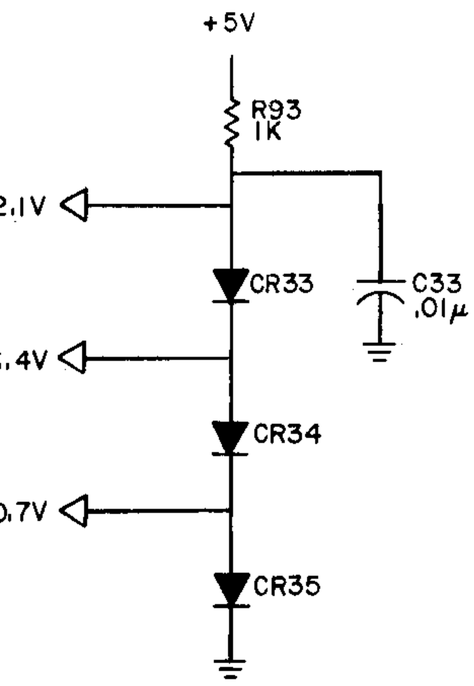

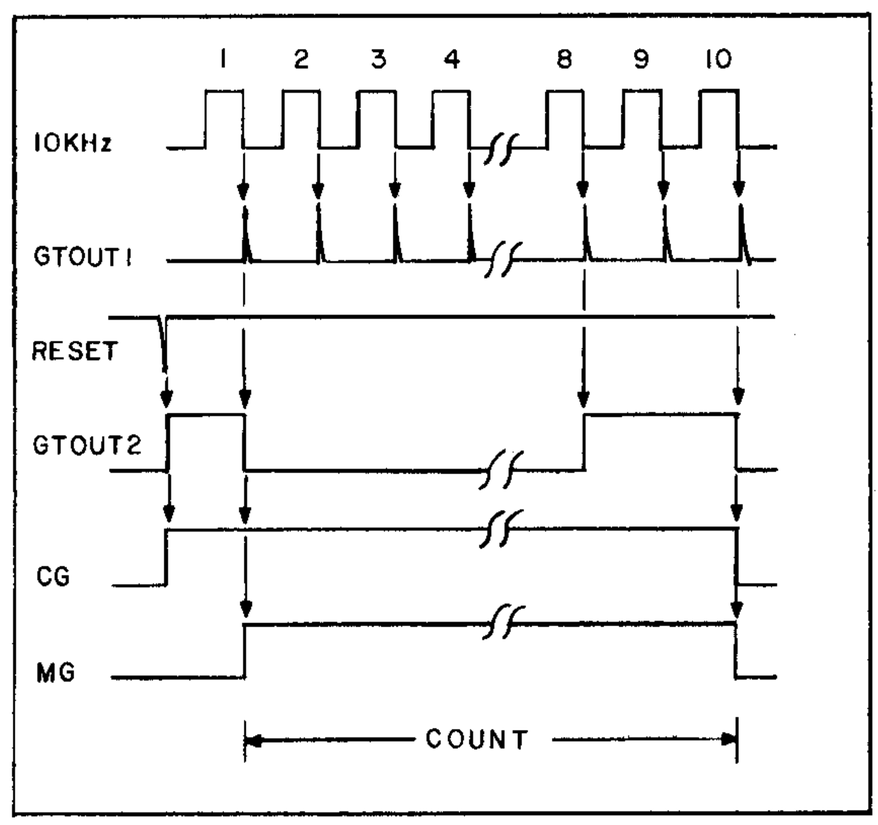

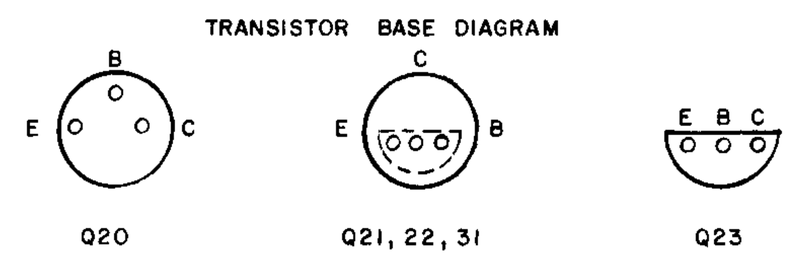

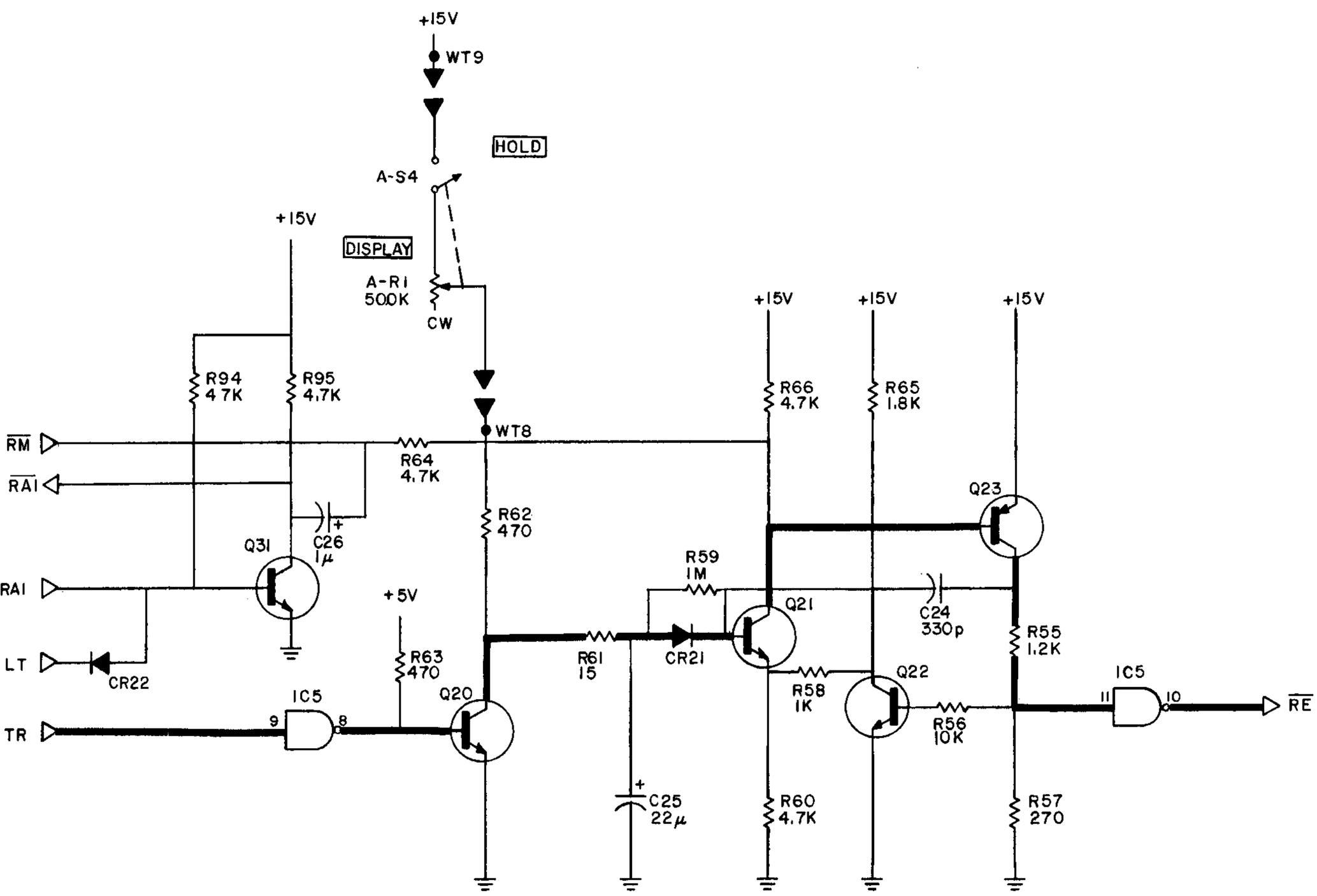

DISPLAY CIRCUIT

Figure 6-9. Program and display circuit schematic diagrams. **B4**

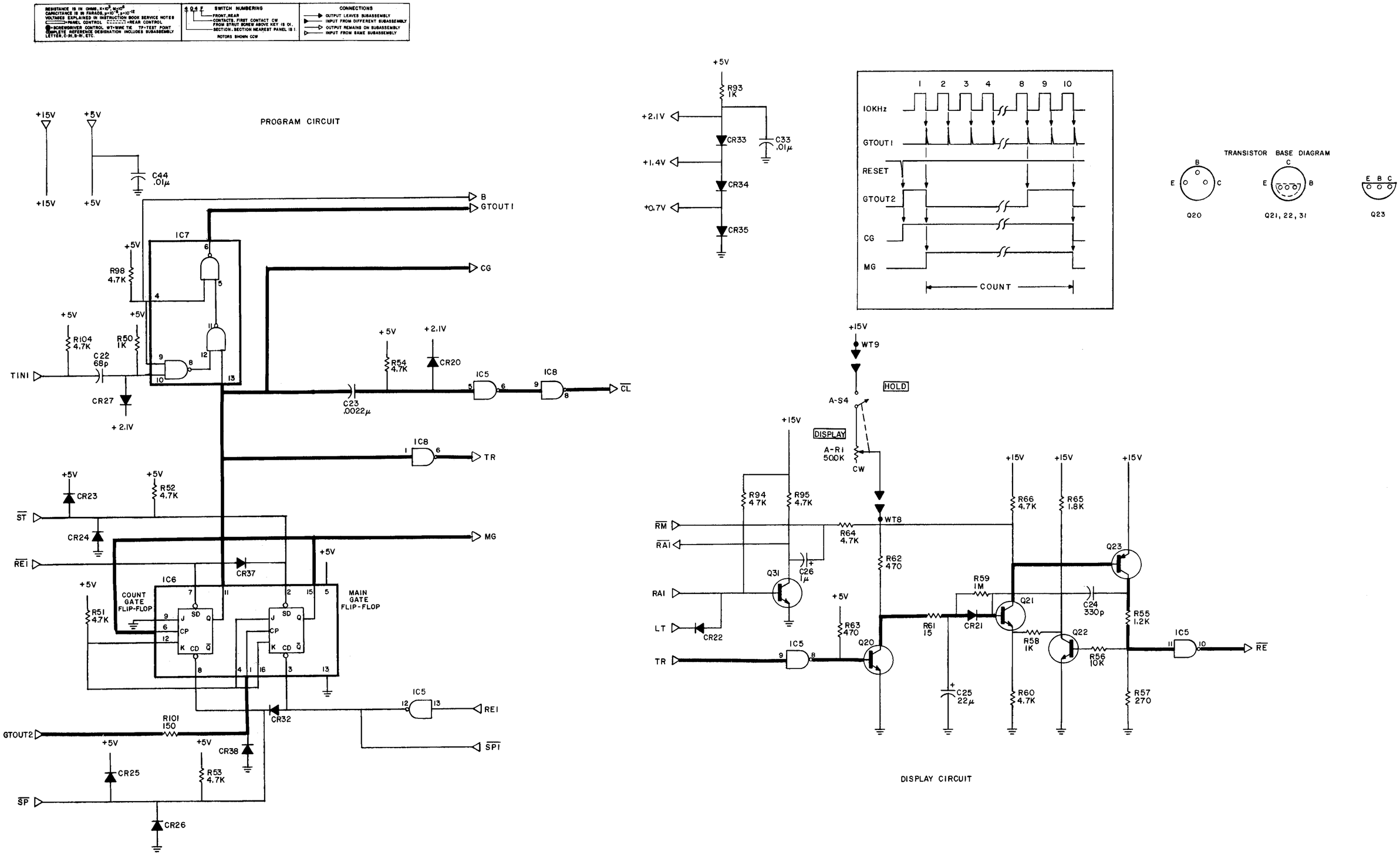

Figure 6-9. Program and display circuit schematic diagrams. **B4**

ELECTRICAL PARTS LIST (cont)

Ref Des	Description	GR Part No.	Fed Mfg Code	Mfg Part No.	Fed Stock No.
CAPACITORS					
C-C1	Ceramic, 0.01 μF +80-20% 100 V	4401-3100	80131	CC63, 0.01 μF +80-20%	5910-974-5697
C-C2	Electrolytic, 6.8 μF ±20% 6 V	4450-4800	56289	150D685X0010A2	5910-936-1332
C-C3	Ceramic, 0.01 μF +80-20% 100 V	4401-3100	80131	CC63 0.01 μF +80-20%	5910-974-5697
C-C4	0.001 μF +80-20% 500 V	4404-2109	72982	831, 0.0022 μF +80-20%	
DIODES					
C-CR1	Type IN4009	6082-1012	24446	IN4009	5961-892-8700
LAMPS					
C-DS1	Pilot Light	5600-1200	71744	CM7-345	
C-DS2	Pilot Light	5600-1200	71744	CM7-345	
C-DS3	Pilot Light	5600-1200	71744	CM7-345	
C-DS4	Pilot Light	5600-1200	71744	CM7-345	
INTEGRATED CIRCUITS					
C-IC8	Digital, Type DTμL-936	5431-9362	07263	DTμL-936	
C-IC9	Digital, Type DTμL-936	5431-9362	07263	DTμL-936	
C-IC10	Digital, Type DTμL-936	5431-9362	07263	DTμL-936	
C-IC11	Digital, Type DTμL-936	5431-9362	07263	DTμL-936	
C-IC12	Digital, Type DTμL-936	5431-9362	07263	DTμL-936	
C-IC13	Digital, Type DTμL-936	5431-9462	07263	DTμL-936	
C-IC14	Digital, Type DTμL-936	5431-9462	07263	DTμL-936	
C-IC15	Digital, Type DTμL-936	5431-9462	07263	DTμL-936	
C-IC16	Digital, Type DTμL-946	5431-9462	07263	DTμL-946	
C-IC17	Digital, Type DTμL-946	5431-9462	07263	DTμL-946	
C-IC18	Digital, Type DTμL-946	5431-9462*Δ	07263	DTμL-946	
C-IC19	Digital, Type DTμL-946	5431-9462 Δ	07263	DTμL-946	
C-IC20	Digital, Type DTμL-946	5431-9462	07263	DTμL-946	
C-IC21	Digital, Type DTμL-946	5431-9462	07263	DTμL-946	
C-IC22	Digital, Type DTμL-946	5431-9462	07263	DTμL-946	
C-IC23	Digital, Type DTμL-946	5431-9462	07263	DTμL-946	
C-IC24	Digital, Type DTμL-946	5431-9462	07263	DTμL-946	
C-IC25	Digital, Type DTμL-946	5431-9462*Δ	07263	DTμL-946	
C-IC26	Digital, Type DTμL-946	5431-9462 Δ	07263	DTμL-946	
C-IC27	Digital, Type SN7490N	5431-8190	01295	SN7490N	
C-IC28	Digital, Type SN7490N	5431-8190	01295	SN7490N	
C-IC29	Digital, Type SN7490N	5431-8190	01295	SN7490N	
C-IC30	Digital, Type SN7490N	5431-8190	01295	SN7490N	
C-IC31	Digital, Type SN7490N	5431-8190	01295	SN7490N	
C-IC32	Digital, Type SN7490N	5431-8190*Δ	01295	SN7490N	
C-IC33	Digital, Type SN7490N	5431-8190 Δ	01295	SN7490N	
C-IC34	Digital, Type DTμL-946	5431-9462	07263	DTμL-946	
C-IC35	Digital, Type DTμL-936	5431-9463	07263	DTμL-9362	
C-IC36	Digital, Type SN7940N	5431-8190	01295	SN7940N	
C-IC37	Digital, Type SN7940N	5431-8190	01295	SN7940N	
C-IC38	Digital, Type SN7940N	5431-8190	01295	SN7940N	
C-IC39	Digital, Type SN7940N	5431-8190	01295	SN7940N	
C-IC40	Digital, Type SN7940N	5431-8190	01295	SN7940N	
C-IC41	Digital, Type SF203	5431-9605	11293	SF203	
C-IC42	Digital, Type DTμL-960	5431-9602	07263	DTμL-960	
C-IC43	Digital, Type DTμL-960	5431-9602	07263	DTμL-960	
C-IC44	Digital, Type DTμL-960	5431-9602	07263	DTμL-960	
C-IC45	Digital, Type DTμL-960	5431-9602	07263	DTμL-960	
C-IC46	Digital, Type DTμL-960	5431-9602	07263	DTμL-960	
C-IC47	Digital, Type DTμL-960	5431-9602*Δ	07263	DTμL-960	
C-IC48	Digital, Type DTμL-960	5431-9602 Δ	07263	DTμL-960	
SOCKET					
C-J1		7540-0400	92379	#SK-207	
C-J2		7540-0400	72379	#SK-207	
C-J3		7540-0400	92379	#SK-207	
C-J4		7540-0400	92379	#SK-207	
C-J5		7540-0400	92379	#SK-207	
C-J6		7540-0400	92379	#SK-207	
C-J7		7540-0400	92379	#SK-207	
C-J15	Multiple Plug	4220-1510	02660	57-1389	
C-J16	Multiple Socket	4230-4530	02660	225-21521-105	
C-J17	Signal Jack	4260-1291	70563	380598-1	

*For Six Digit ΔFor Seven Digit

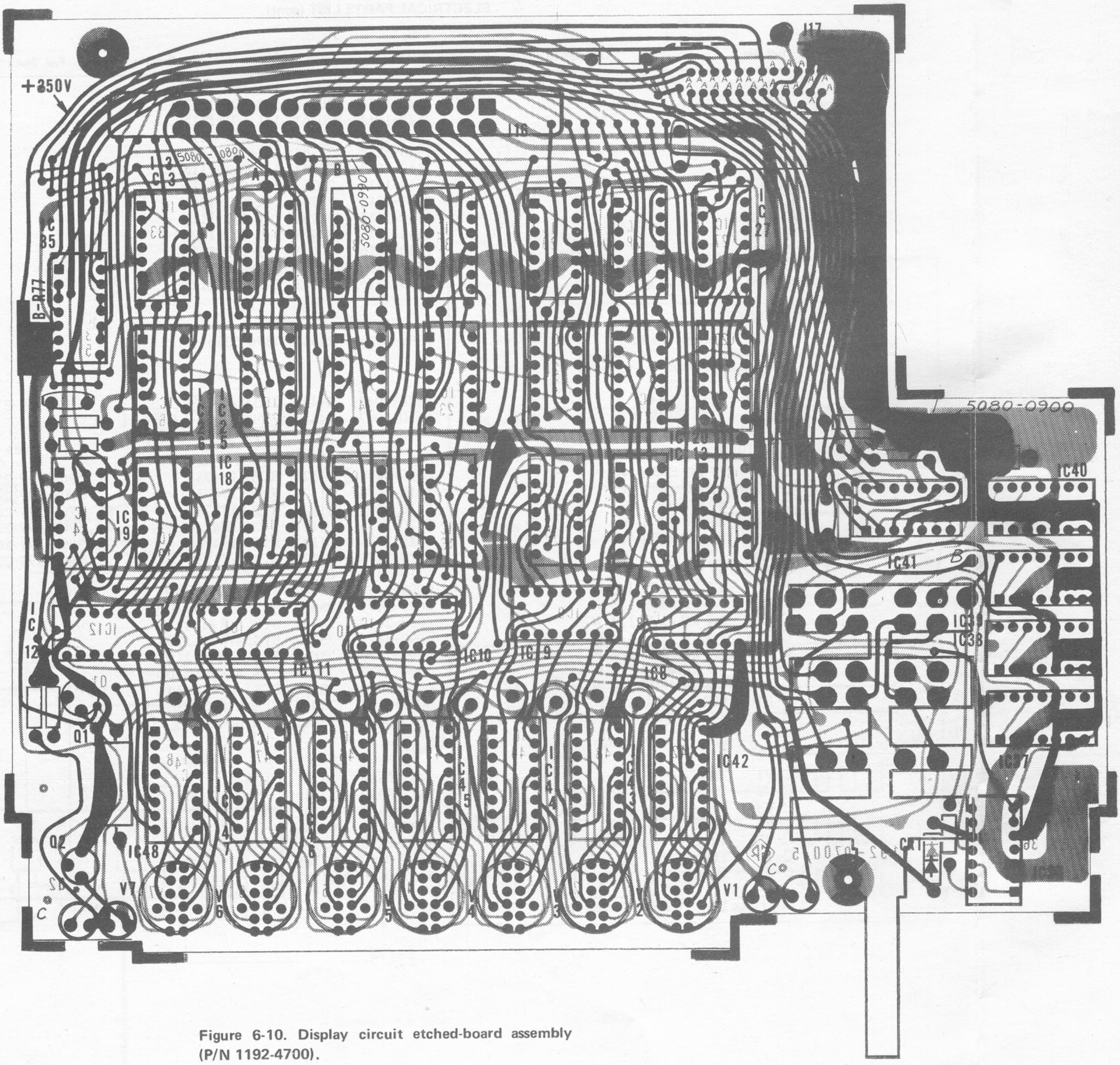

Figure 6-10. Display circuit etched-board assembly (P/N 1192-4700).

NOTE: The board is shown foil-side up. The number appearing on the foil side is *not* the part number. The dot on the foil at the transistor socket indicates the collector lead.

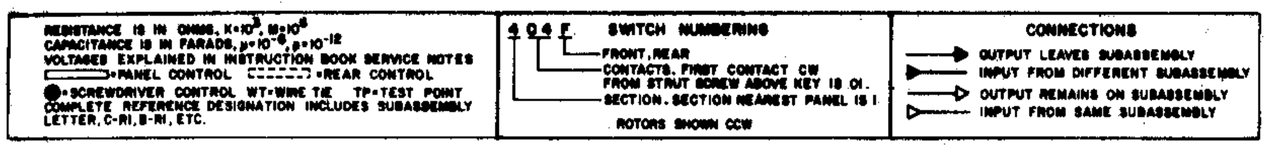
RESISTANCE IS IN OHMS, K=10³, M=10⁶
CAPACITANCE IS IN FARADS, μ=10⁻⁶, p=10⁻¹²
VOLTAGES EXPLAINED IN INSTRUCTION BOOK SERVICE NOTES
=PANEL CONTROL =REAR CONTROL
=SCREWDRIVER CONTROL WT=WIRE TIE TP=TEST POINT
COMPLETE REFERENCE DESIGNATION INCLUDES SUBASSEMBLY LETTER, C-R1, B-R1, ETC.
4 0 4 F
SWITCH NUMBERING
FRONT, REAR
CONTACTS. FIRST CONTACT CW FROM STRUT SCREW ABOVE KEY IS 01.
SECTION. SECTION NEAREST PANEL IS 1
ROTORS SHOWN CCW
CONNECTIONS
OUTPUT LEAVES SUBASSEMBLY
INPUT FROM DIFFERENT SUBASSEMBLY
OUTPUT REMAINS ON SUBASSEMBLY
INPUT FROM SAME SUBASSEMBLY

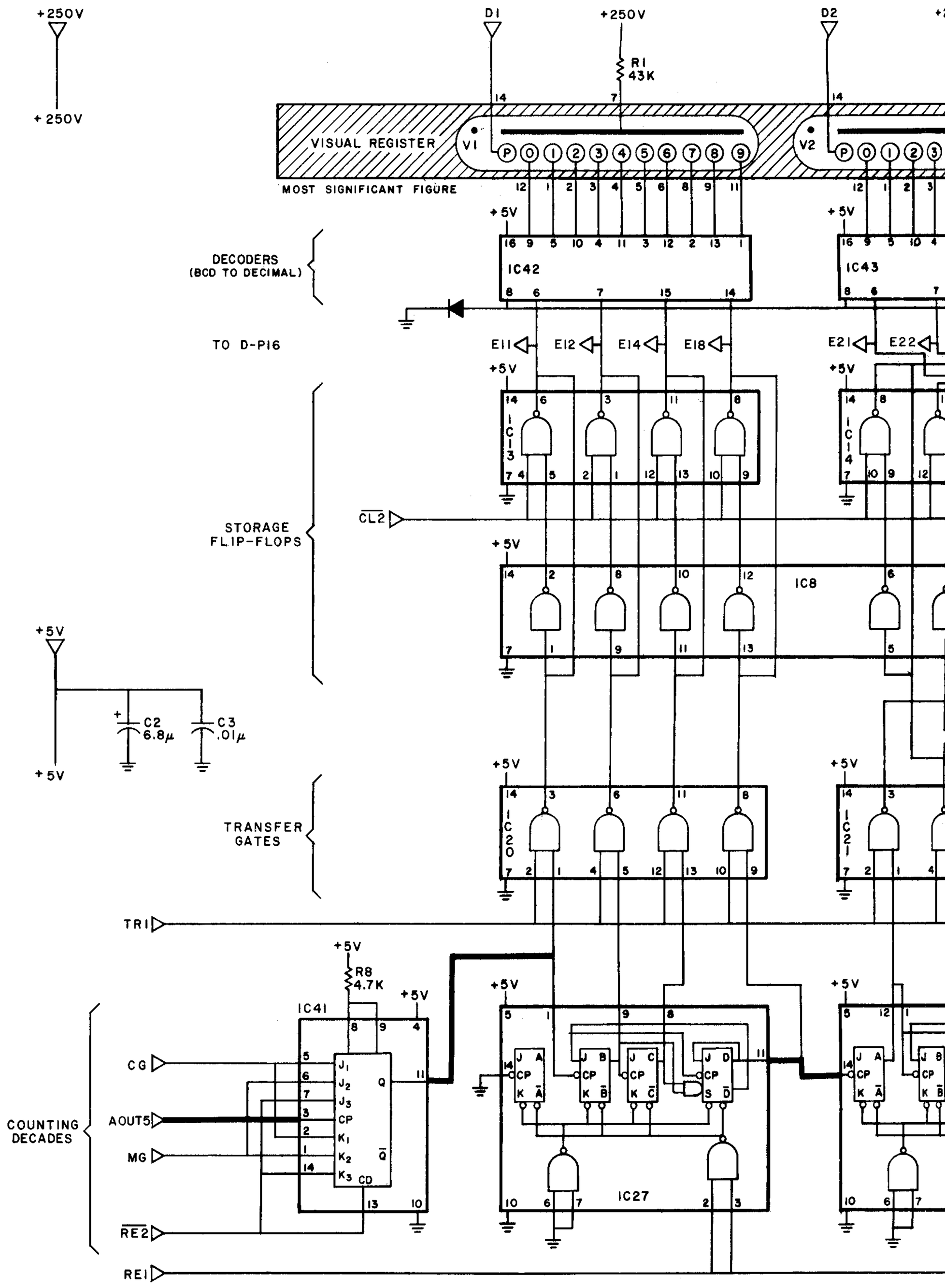
+250V
+250V
D1
+250V
R1
43K
D2
VISUAL REGISTER
V1
V2
MOST SIGNIFICANT FIGURE
+5V
DECODERS
(BCD TO DECIMAL)
IC42
IC43
TO D-P16
E11
E12
E14
E18
E21
E22
STORAGE
FLIP-FLOPS
IC13
IC14
CL2
IC8
+5V
C2
6.8μ
C3
.01μ
TRANSFER
GATES
IC20
IC21
TR1
R8
4.7K
IC41
COUNTING
DECADES
CG
AOUT5
MG
RE2
RE1
IC27

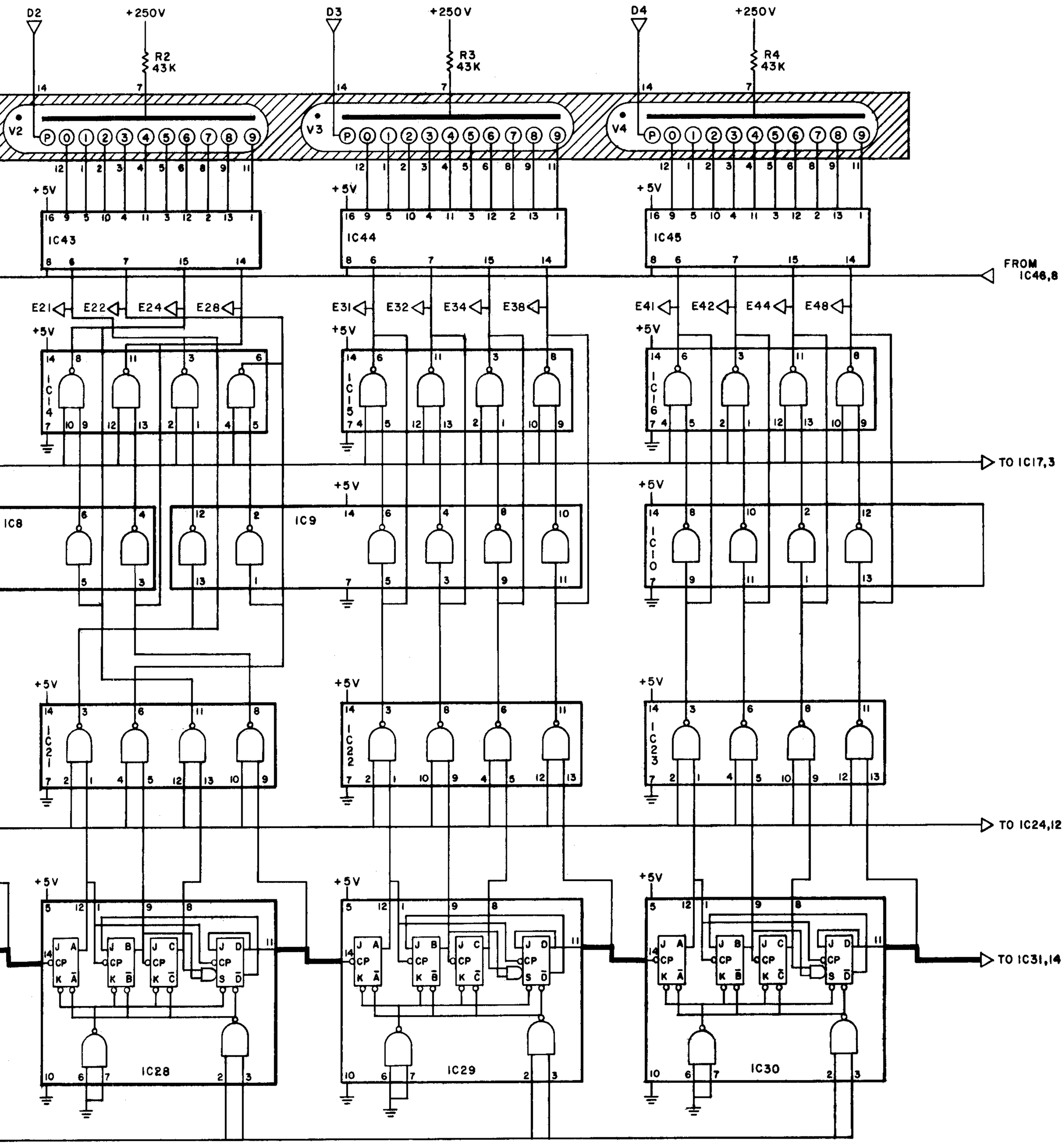

Figure 6-11. Digital and visual display schematic diagram, part 1.

C1

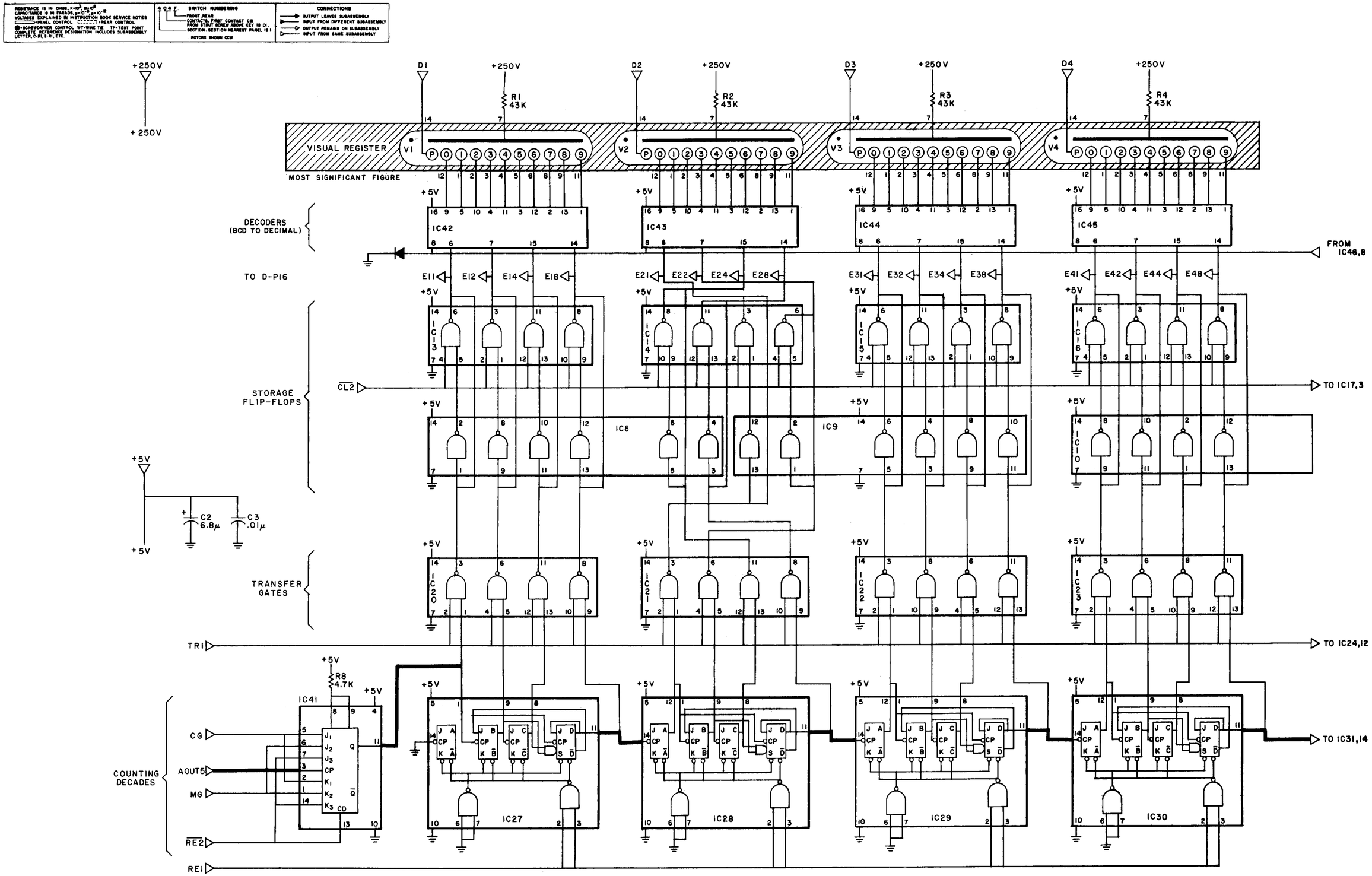

Figure 6-11. Digital and visual display schematic diagram, part 1.

C1

ELECTRICAL PARTS LIST (cont)

Ref Des	Description	GR Part No.	Fed Mfg Code	Mfg Part No.	Fed Stock No.
C-J18		7540-1814	70763	141-001-111N	
C-J19		7540-1814	70763	141-001-111N	
C-J25		7540-1814	70763	141-001-111N	
C-J26		7540-1814	70763	141-001-111N	
C-J32		7540-1814	70763	141-001-111N	
C-J33		7540-1814	70763	141-001-111N	
C-J42		7540-1816	70763	141-001-112N	
C-J43		7540-1816	70763	141-001-112N	
C-J44		7540-1816	70763	141-001-112N	
C-J45		7540-1816	70763	141-001-112N	
C-J46		7540-1816	70763	141-001-112N	
C-J47		7540-1816	70763	141-001-112N	
C-J48		7540-1816	70763	141-001-112N	
SWITCHES					
C-S1	Rotary Wafer	7890-5316	24655	7890-5316	
TRANSISTORS					
C-Q1	Type 2N3414	8210-1047	24446	2N3414	5961-989-2749
C-Q2	Type 2N3414	8210-1047	24446		
RESISTORS					
C-R1	47 kΩ ±5% 1 W	6110-3475	01121	RC32GF473J	5905-299-2013
C-R2	47 kΩ ±5% 1 W	6110-3475	01121	RC32GF473J	5905-299-2013
C-R3	47 kΩ ±5% 1 W	6110-3475	01121	RC32GF473J	5905-299-2013
C-R4	47 kΩ ±5% 1 W	6110-3475	01121	RC32GF473J	5905-299-2013
C-R5	47 kΩ ±5% 1 W	6110-3475	01121	RC32GF473J	5905-299-2013
C-R6	47 kΩ ±5% 1 W	6110-3475	01121	RC32GF473J	5905-299-2013
C-R7	47 kΩ ±5% 1 W	6110-3475	01121		
C-R8	4.7 kΩ ±10% 1/4 W	6099-2479	75042	BTS, 4.7 kΩ ±10%	
C-R10	4.7 kΩ ±10% 1/4 W	6099-2479	75042	BTS, 4.7 kΩ ±10%	
C-R11	4.7 kΩ ±10% 1/4 W	6099-2479	75042	BTS, 4.7 kΩ ±10%	
C-R12	4.7 kΩ ±10% 1/4 W	6099-2479	75042	BTS, 4.7 kΩ ±10%	
C-R13	4.7 kΩ ±10% 1/4 W	6099-2479	75042	BTS, 4.7 kΩ ±10%	
C-R14	4.7 kΩ ±10% 1/4 W	6099-2479	75042	BTS, 4.7 kΩ ±10%	
C-R15	4.7 kΩ ±10% 1/4 W	6099-2479	75042	BTS, 4.7 kΩ ±10%	
C-R16	100 Ω ±10% 1/4 W	6099-1109	75042	BTS, 100 Ω ±10%	
C-R17	68 Ω ±10% 1/4 W	6099-0689	75042	BTS, 68 Ω ±10%	
TUBES					
C-V1	Tube	5437-0850	83781	NL-845	
C-V2	Tube	5437-0850	83781		
C-V3	Tube	5437-0850	83781		
C-V4	Tube	5437-0850	83781		
C-V5	Tube	5437-0850	83781		
C-V6	Tube	5437-0850*Δ	83781		
C-V7	Tube	5437-0850 Δ	83781		

*For Six Digit ΔFor Seven Digit

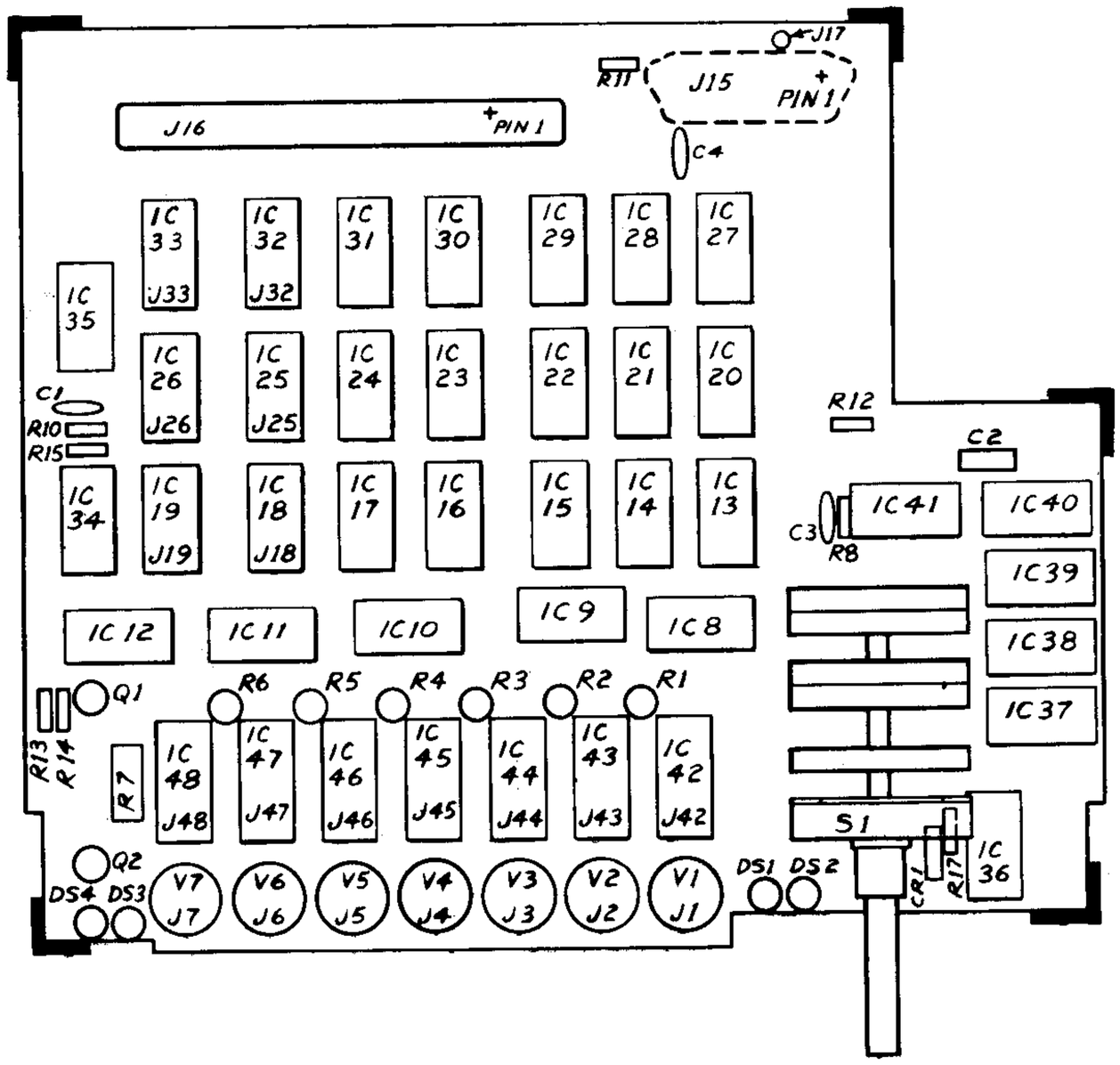
J17
R11
J15
PIN 1
J16
PIN 1
C4
IC 33
IC 32
IC 31
IC 30
IC 29
IC 28
IC 27
IC 35
J33
J32
IC 26
IC 25
IC 24
IC 23
IC 22
IC 21
IC 20
C1
R10
R15
J26
J25
R12
C2
IC 34
IC 19
IC 18
IC 17
IC 16
IC 15
IC 14
IC 13
C3
R8
IC 41
IC 40
IC 39
J19
J18
IC 12
IC 11
IC 10
IC 9
IC 8
IC 38
IC 37
Q1
R6
R5
R4
R3
R2
R1
R13
R14
R7
IC 48
IC 47
IC 46
IC 45
IC 44
IC 43
IC 42
J48
J47
J46
J45
J44
J43
J42
S1
Q2
DS4
DS3
V7
V6
V5
V4
V3
V2
V1
J7
J6
J5
J4
J3
J2
J1
DS1
DS2
CR1
R17
IC 36

Blank Page

RESISTANCE IS IN OHMS, K=10^3, M=10^6
CAPACITANCE IS IN FARADS, μ=10^{-6}, p=10^{-12}
VOLTAGES EXPLAINED IN INSTRUCTION BOOK SERVICE NOTES
[ ]=PANEL CONTROL [- - - -]=REAR CONTROL
●=SCREWDRIVER CONTROL WT=WIRE TIE TP=TEST POINT
COMPLETE REFERENCE DESIGNATION INCLUDES SUBASSEMBLY LETTER, C-R1, B-R1, ETC.

404F SWITCH NUMBERING
F — FRONT, REAR
04 — CONTACTS. FIRST CONTACT CW FROM STRUT SCREW ABOVE KEY IS 01.
4 — SECTION. SECTION NEAREST PANEL IS 1
ROTORS SHOWN CCW

CONNECTIONS
→ OUTPUT LEAVES SUBASSEMBLY
▶ INPUT FROM DIFFERENT SUBASSEMBLY
→ OUTPUT REMAINS ON SUBASSEMBLY
▷ INPUT FROM SAME SUBASSEMBLY

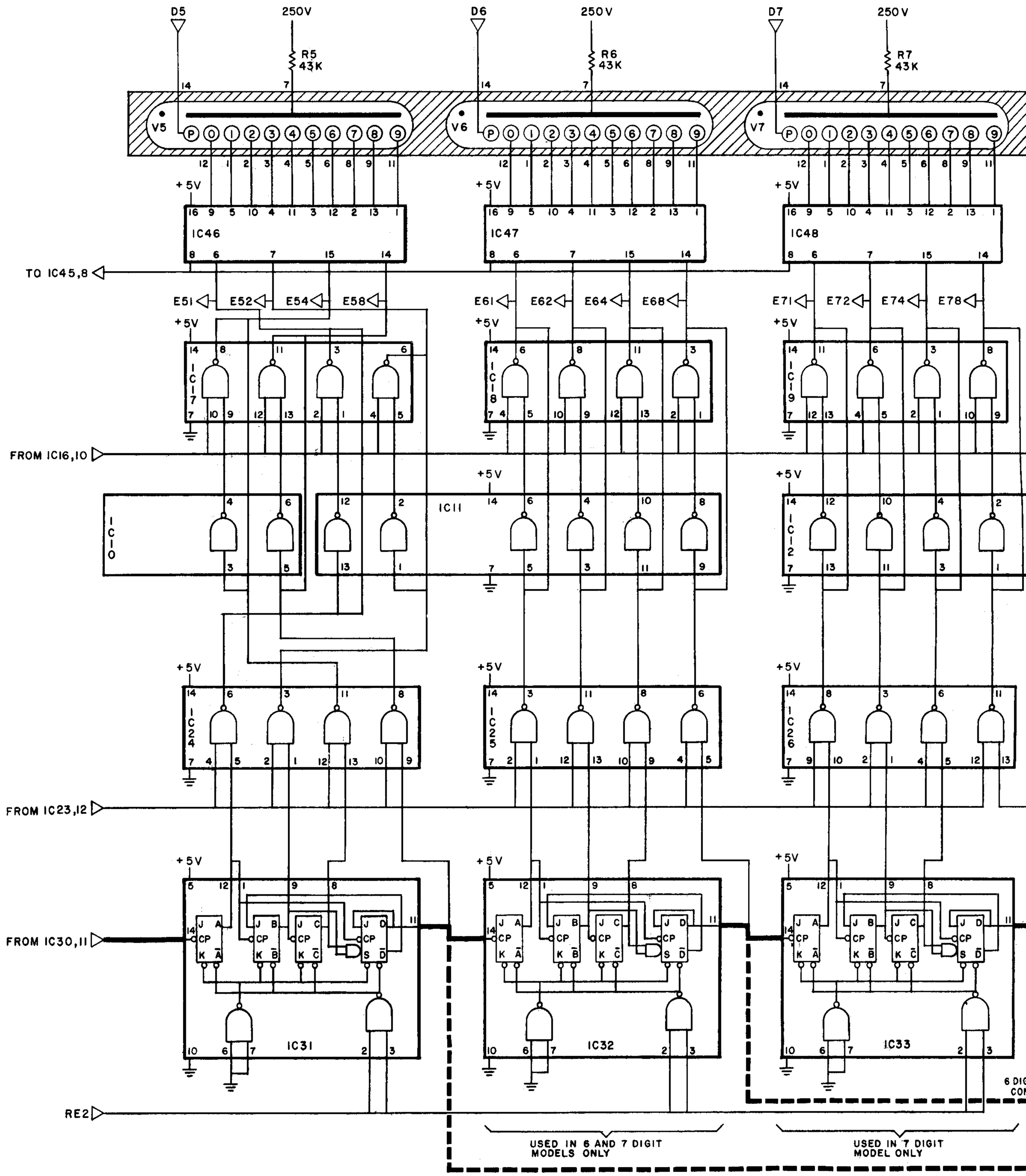

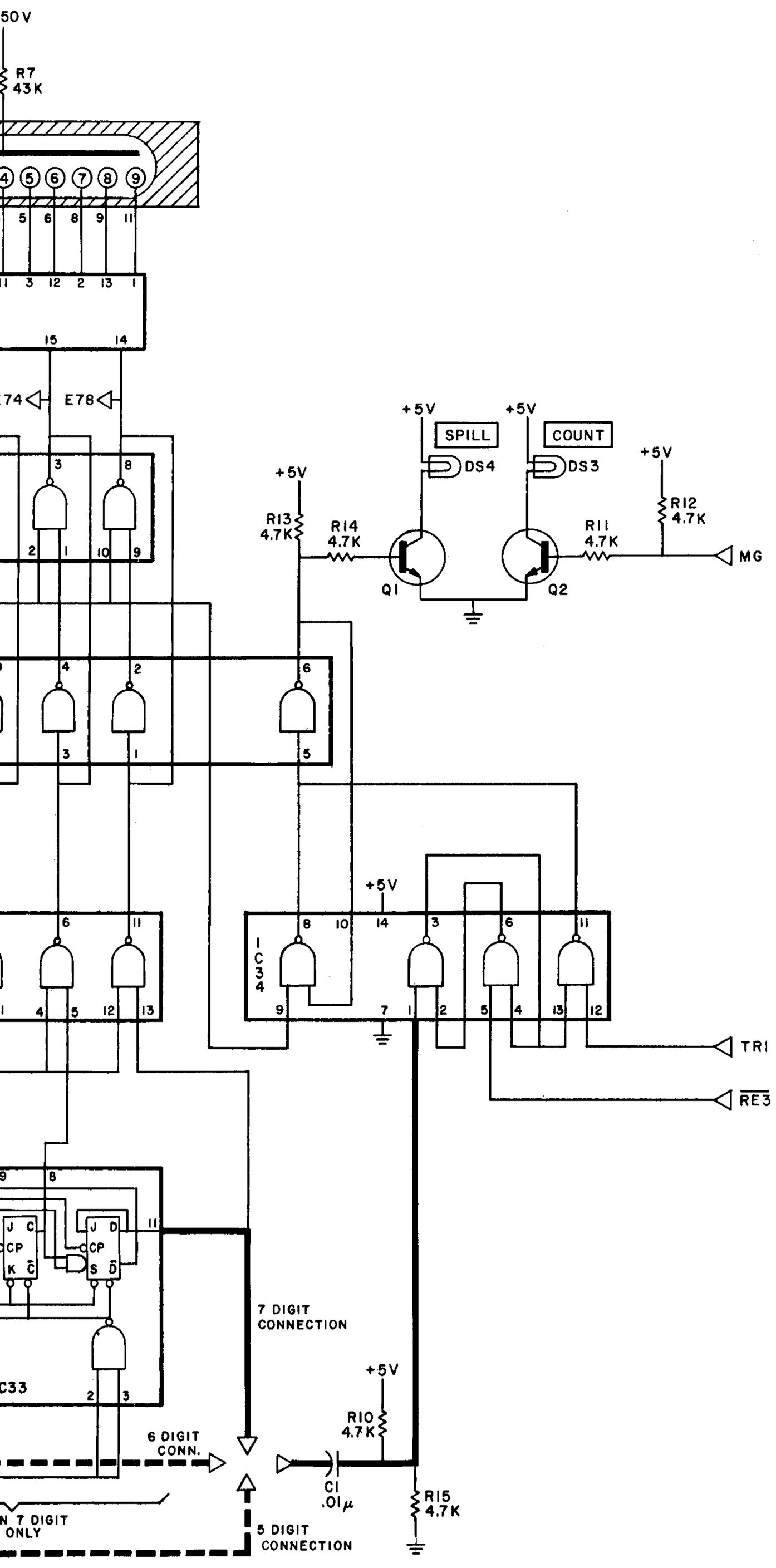

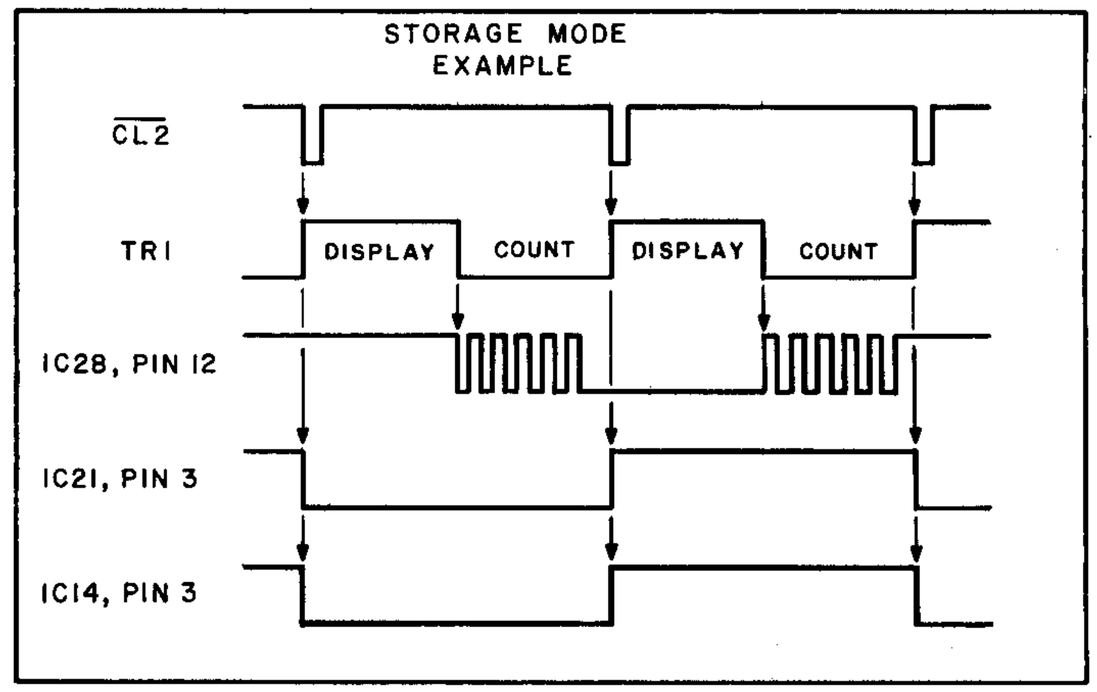

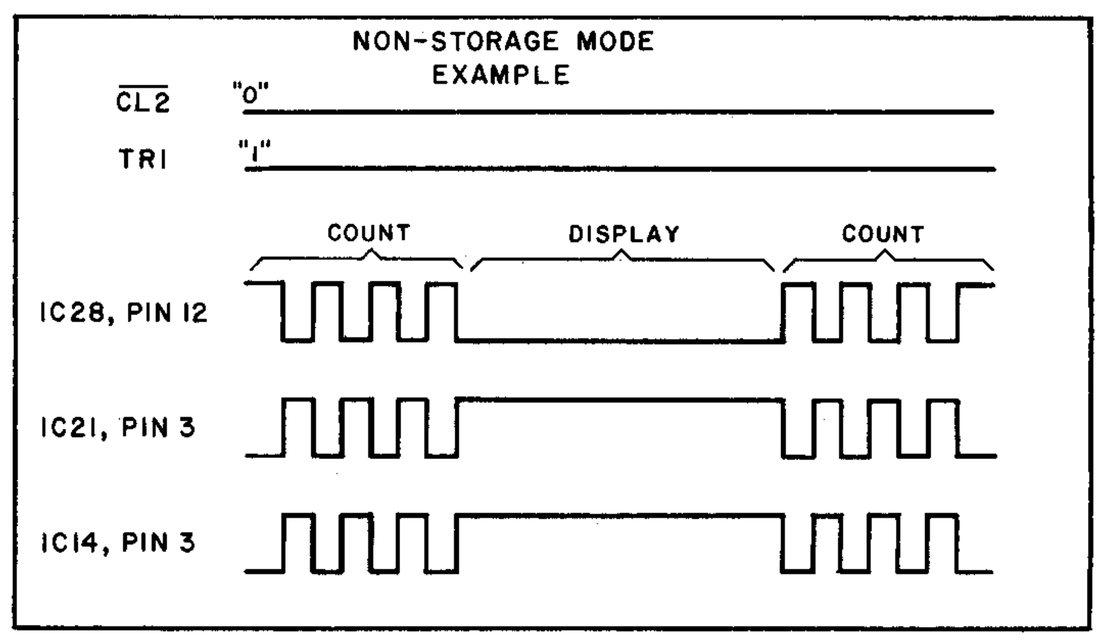

Figure 6-12. Digital and visual display schematic diagram, part 2. **C2**

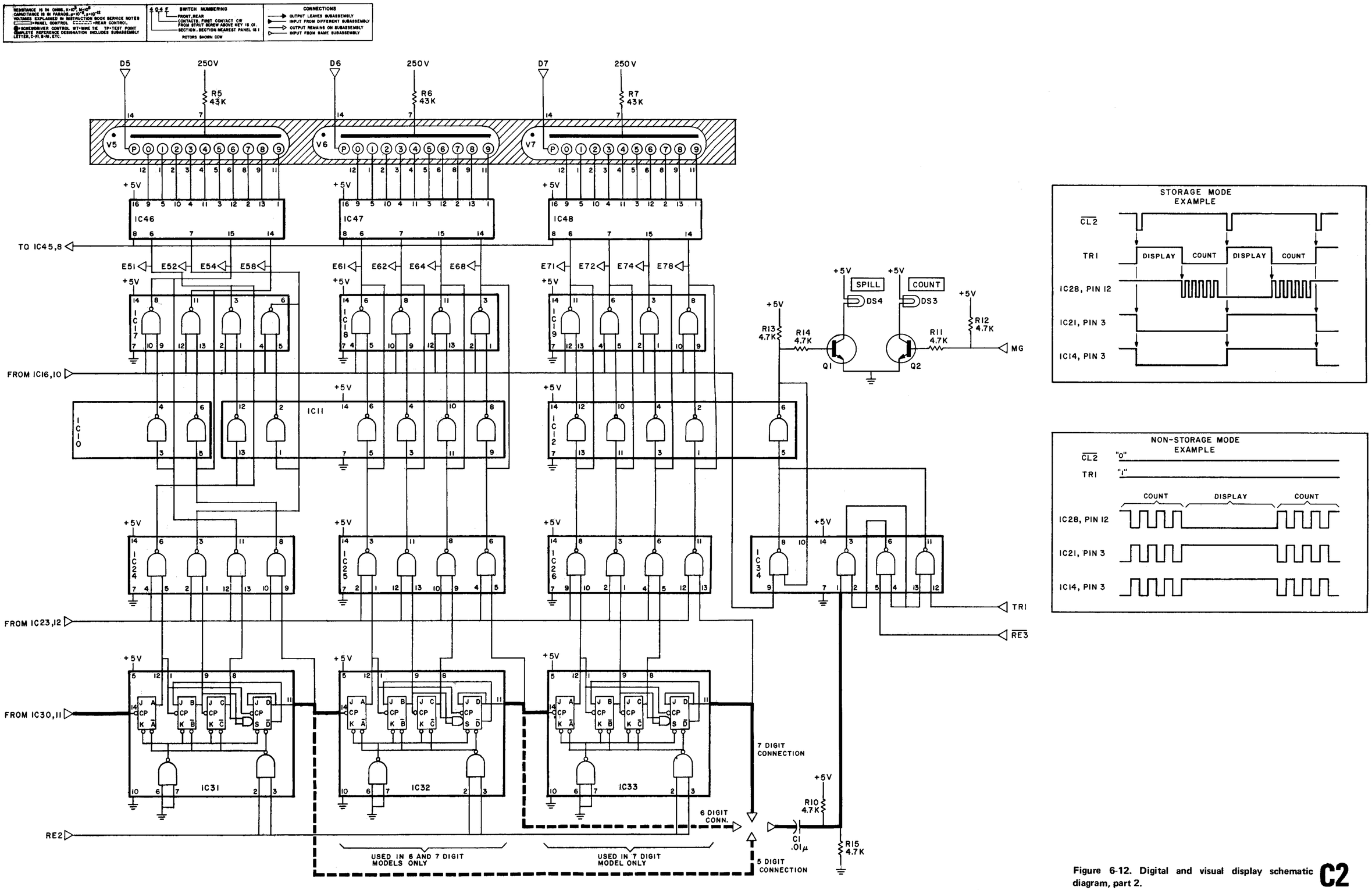

Figure 6-12. Digital and visual display schematic diagram, part 2. **C2**

Blank Page

RESISTANCE IS IN OHMS, K=10^3, M=10^6
CAPACITANCE IS IN FARADS, μ=10^{-6}, p=10^{-12}
VOLTAGES EXPLAINED IN INSTRUCTION BOOK SERVICE NOTES
▭=PANEL CONTROL ⊡=REAR CONTROL
●=SCREWDRIVER CONTROL WT=WIRE TIE TP=TEST POINT
COMPLETE REFERENCE DESIGNATION INCLUDES SUBASSEMBLY LETTER, C-R1, B-R1, ETC.

4 0 4 F SWITCH NUMBERING
FRONT, REAR
CONTACTS. FIRST CONTACT CW FROM STRUT SCREW ABOVE KEY IS .01.
SECTION. SECTION NEAREST PANEL IS 1.
ROTORS SHOWN CCW

CONNECTIONS
OUTPUT LEAVES SUBASSEMBLY
INPUT FROM DIFFERENT SUBASSEMBLY
OUTPUT REMAINS ON SUBASSEMBLY
INPUT FROM SAME SUBASSEMBLY

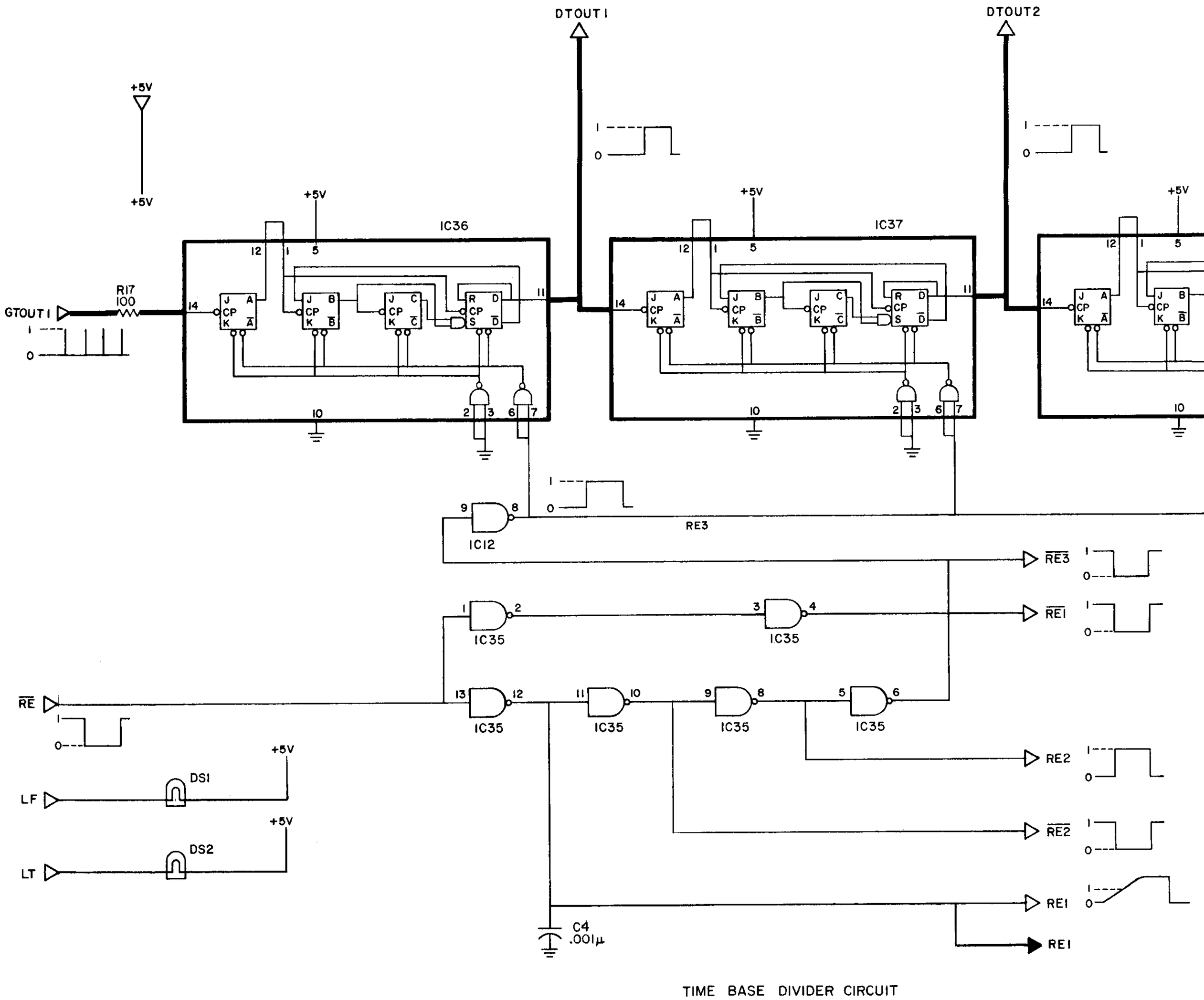

TIME BASE DIVIDER CIRCUIT

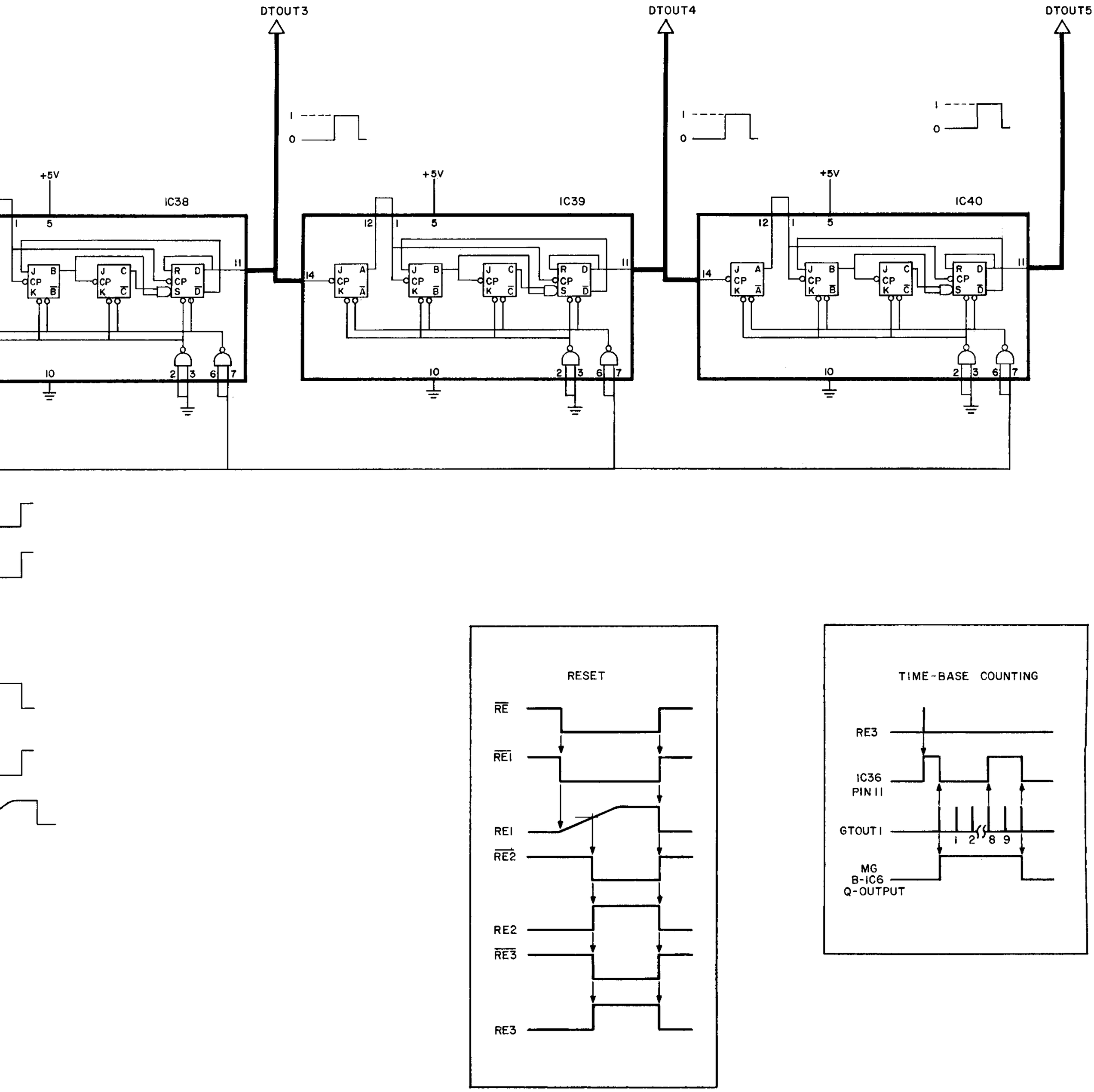

Figure 6-13. Time-base divider schematic diagram. **C3**

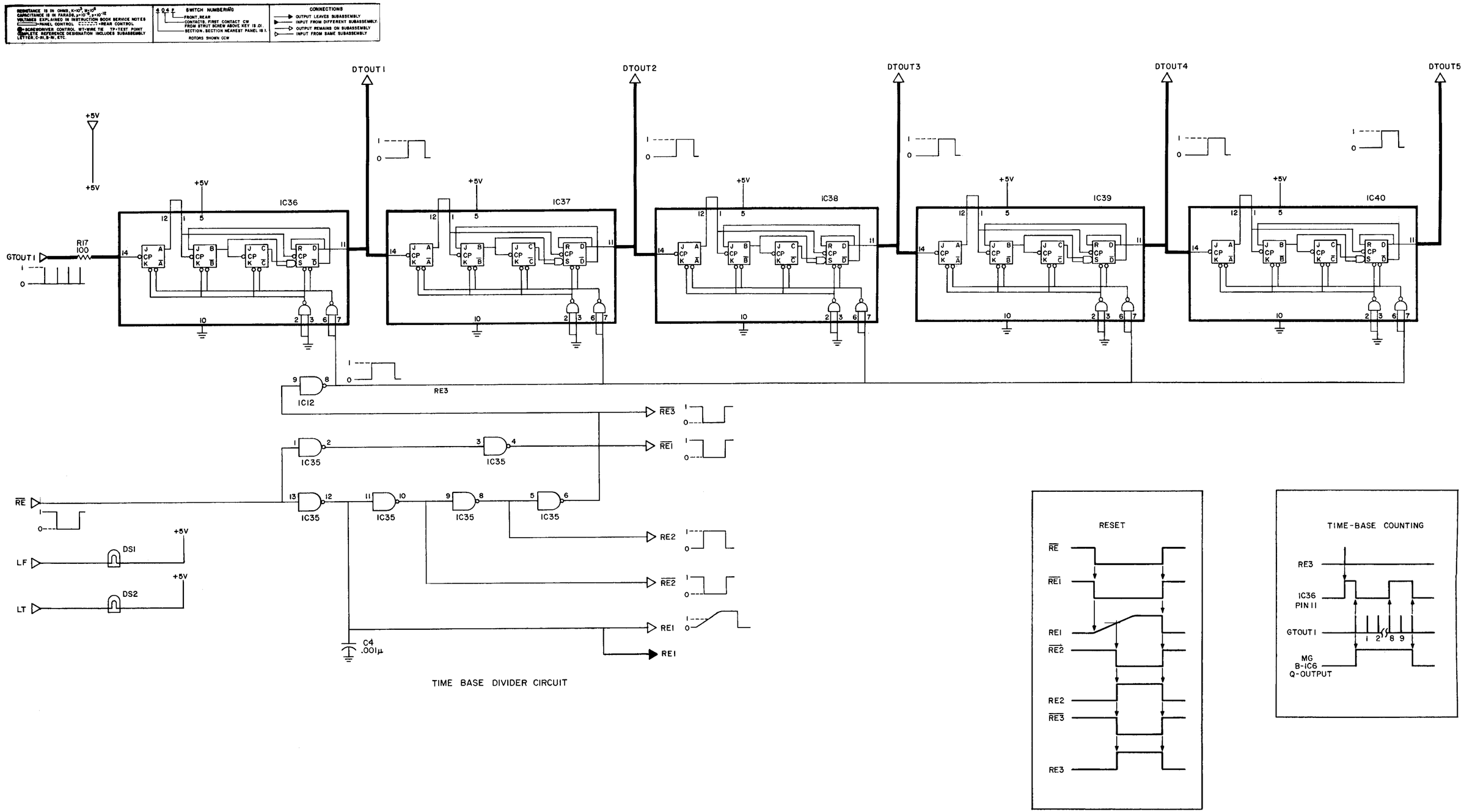

Figure 6-13. Time-base divider schematic diagram. **C3**

Ref Des	Description	GR Part No.	Fed Mfg Code	Mfg Part No.	Fed Stock No.
SOCKET					
D-J1	Connector, Multiple Socket	4230-4049	93916	57-40500	5935-062-1776
INTEGRATED CIRCUITS					
D-IC1	Digital, Type DTμL-936	5431-9362	07263	DTμL-936	
D-IC2	Digital, Type DTμL-936	5431-9362	07263	DTμL-936	
D-IC3	Digital, Type DTμL-936	5431-9362	07263	DTμL-936	
D-IC4	Digital, Type DTμL-936	5431-9362	07263	DTμL-936	
D-IC5	Digital, Type DTμL-936	5431-9362	07263	DTμL-936	

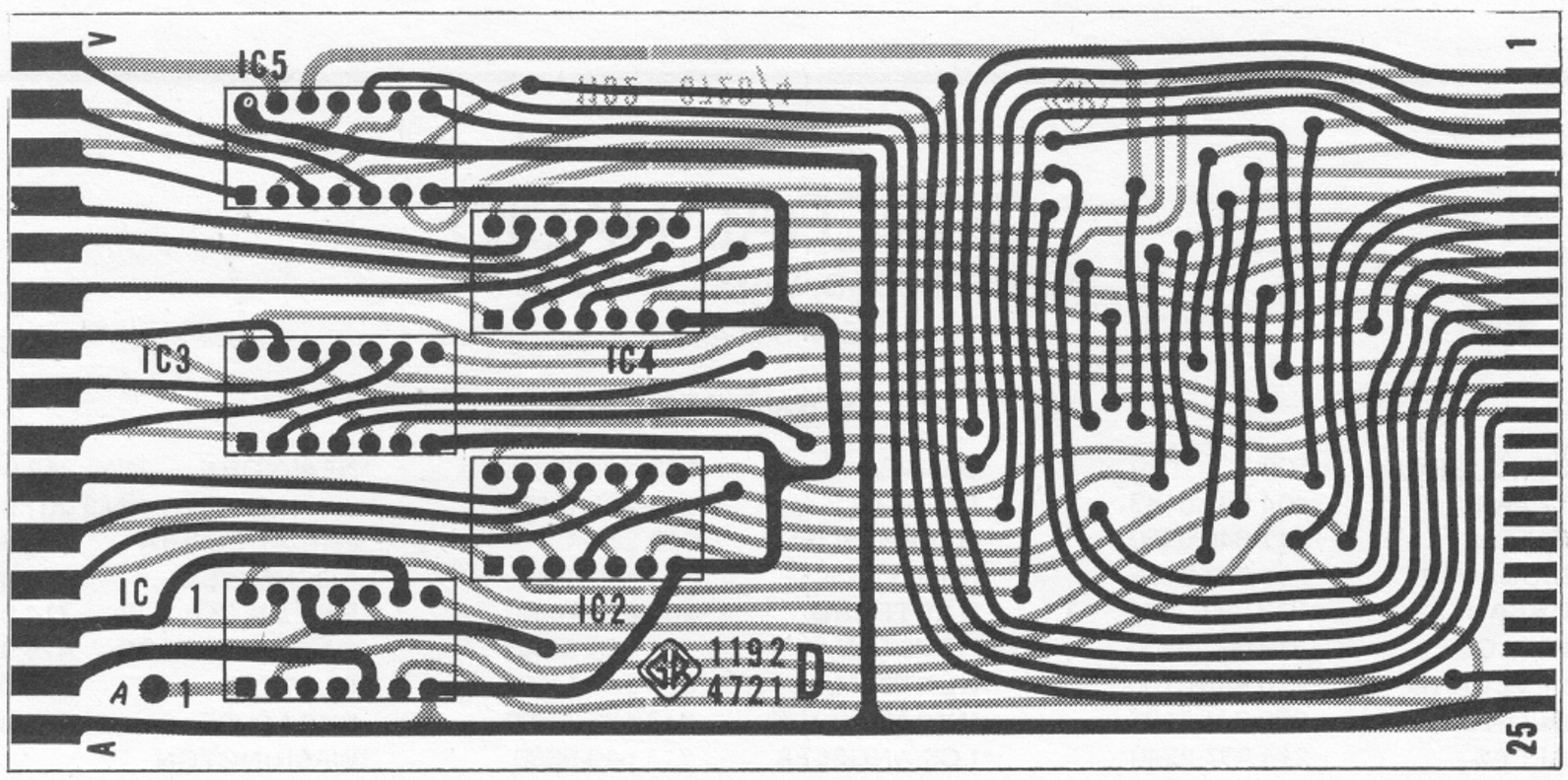

Figure 6-14. Data-output circuit etched-board assembly (P/N 1192-4721).

NOTE: The board is shown foil-side up. The number appearing on the foil side is *not* the part number. The dot on the foil at the transistor socket indicates the collector lead.

RESISTANCE IS IN OHMS, K=10^3, M=10^6
CAPACITANCE IS IN FARADS, μ=10^{-6}, p=10^{-12}
VOLTAGES EXPLAINED IN INSTRUCTION BOOK SERVICE NOTES
[———]=PANEL CONTROL [- - - - -]=REAR CONTROL
●=SCREWDRIVER CONTROL WT=WIRE TIE TP=TEST POINT
COMPLETE REFERENCE DESIGNATION INCLUDES SUBASSEMBLY LETTER, C-R1, B-R1, ETC.

4 0 4 F — SWITCH NUMBERING
F — FRONT, REAR
4 — CONTACTS. FIRST CONTACT CW FROM STRUT SCREW ABOVE KEY IS C1.
0 — SECTION. SECTION NEAREST PANEL IS 1.
ROTORS SHOWN CCW

CONNECTIONS
OUTPUT LEAVES SUBASSEMBLY
INPUT FROM DIFFERENT SUBASSEMBLY
OUTPUT REMAINS ON SUBASSEMBLY
INPUT FROM SAME SUBASSEMBLY

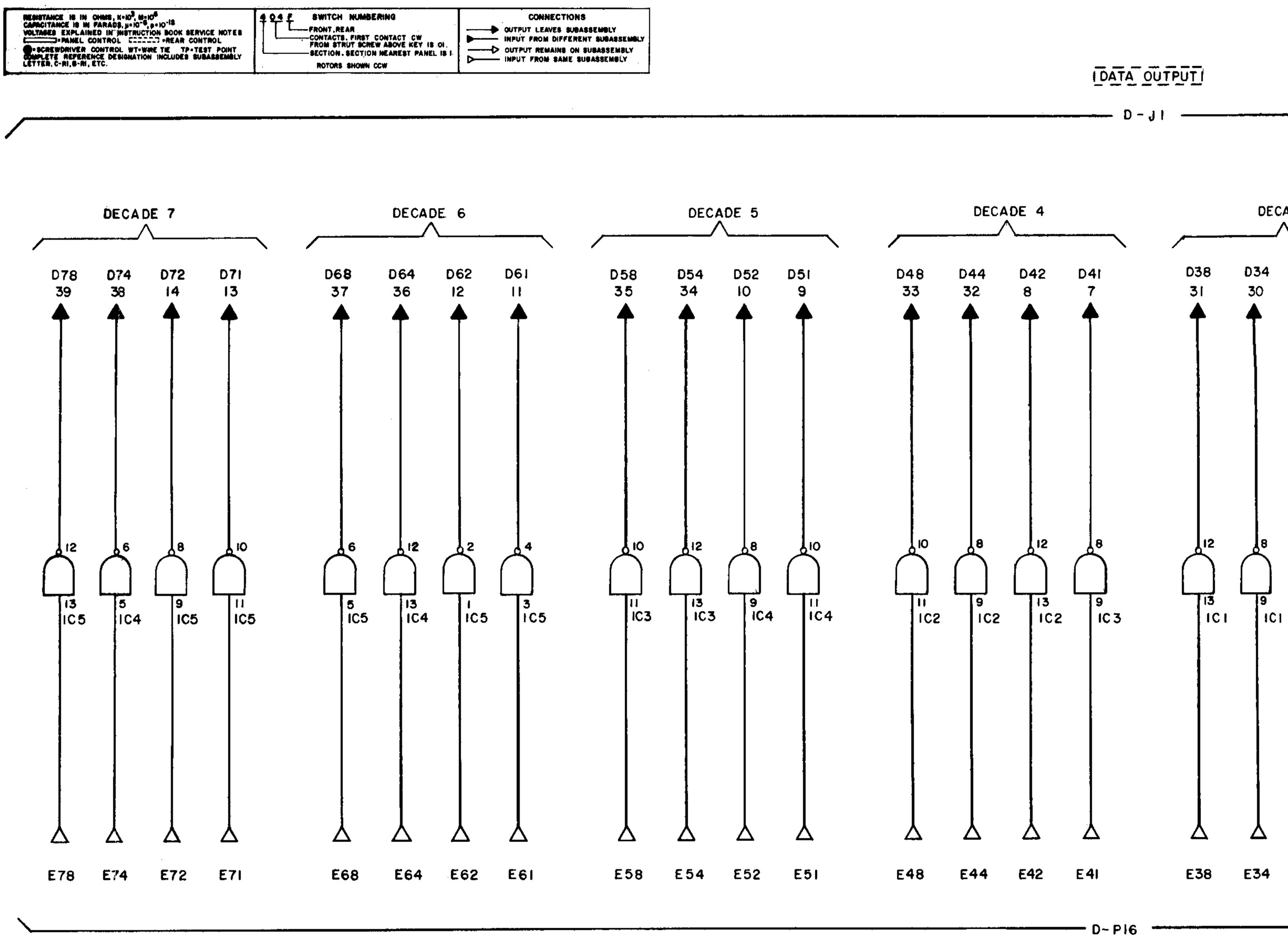

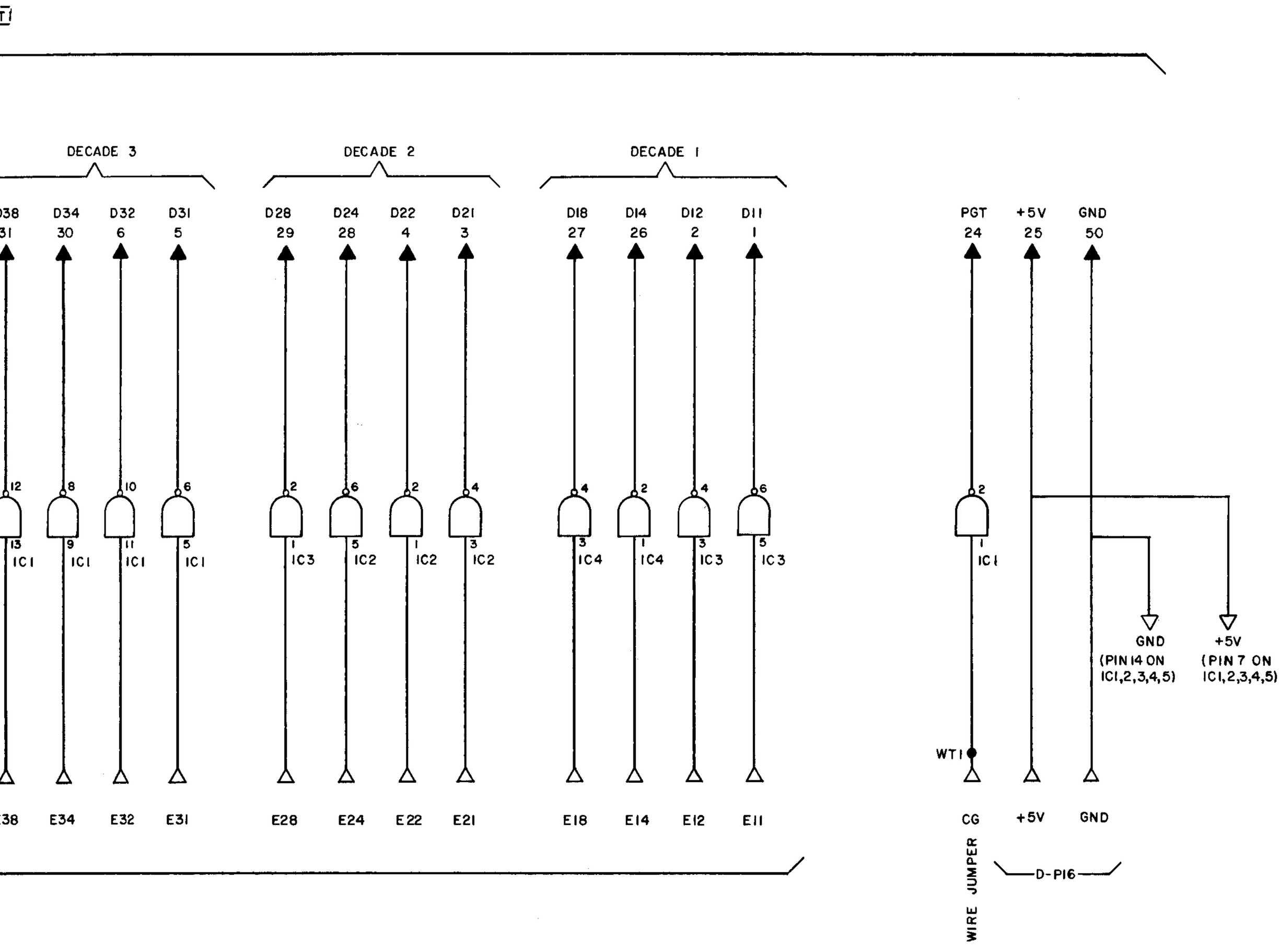

Figure 6-15. Data output schematic diagram. **D**

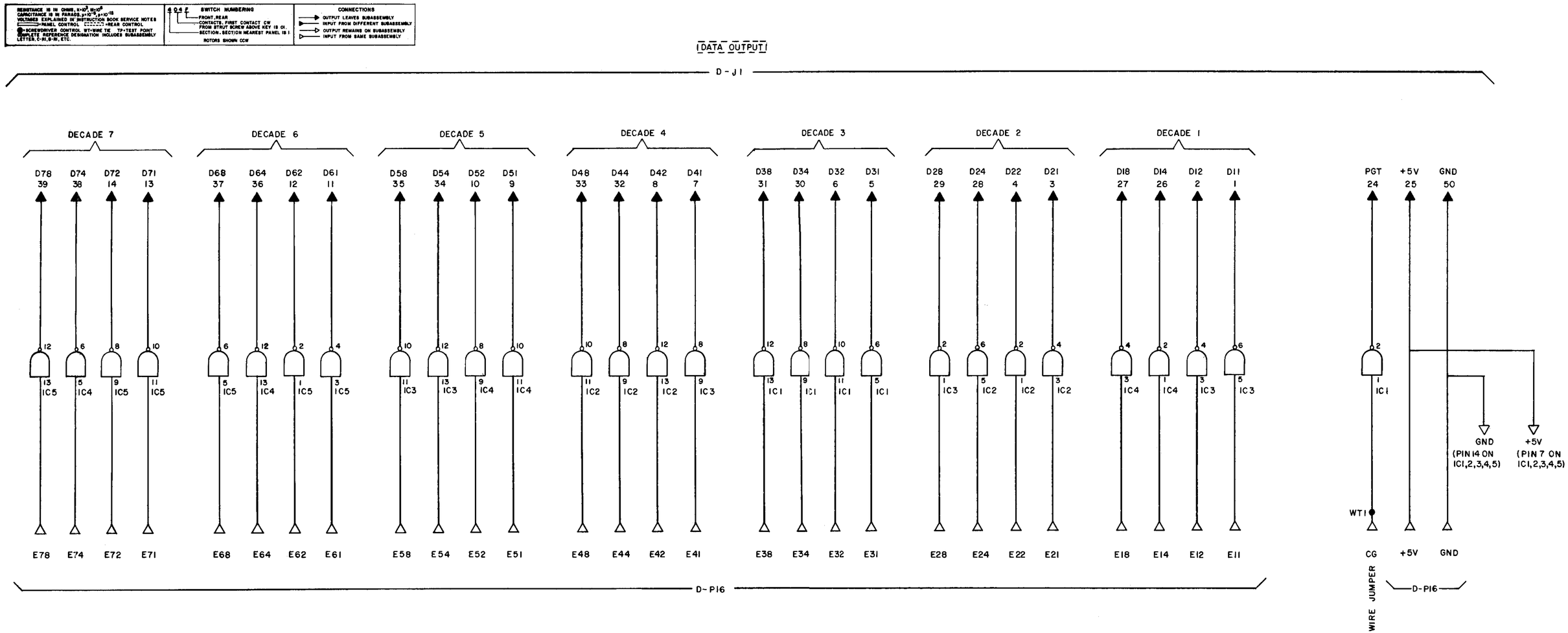

Figure 6-15. Data output schematic diagram. **D**

GENERAL RADIO

WEST CONCORD, MASSACHUSETTS 01781
617 369-4400

SALES AND SERVICE

ALBUQUERQUE	505 265-1099
ATLANTA	404 633-6183
BOSTON	617 646-0550
BRIDGEPORT	203 377-0165
BURBANK	213 899-2644
*CHICAGO	312 992-0800
CLEVELAND	216 886-0150
COCOA BEACH	800 241-5122
*DALLAS	214 637-2240
DAYTON	513 434-6979
DENVER	303 447-9225
DETROIT	313 261-1750
GREENSBORO	919 288-4316
GROTON	203 445-8445
HARTFORD	203 658-2496
HOUSTON	713 464-5112
HUNTSVILLE	800 241-5122
INDIANAPOLIS	317 636-3907
*LOS ANGELES	714 540-9830
*NEW YORK	(NY) 212 964-2722
	(NJ) 201 943-3140
PHILADELPHIA	215 646-8030
ROCHESTER	315 394-2037
SAN DIEGO	714 540-9830
*SAN FRANCISCO	415 948-8233
SEATTLE	206 747-9190
SYRACUSE	315 454-9323
*WASHINGTON, BALTIMORE	301 881-5333

INTERNATIONAL DIVISION

WEST CONCORD, MASSACHUSETTS 01781, USA

ARGENTINE and PARAGUAY
Coasin S. A.
Buenos Aires

AUSTRALIA
Warburton Franki Industries Pty. Ltd.
Sydney, Melbourne, Brisbane, Adelaide

BRAZIL
Ambriex S. A.
Rio de Janeiro GB
São Paulo, S. P.

CANADA –
*General Radio Canada Limited
Toronto, Montreal, Ottawa

CHILE
Coasin Chile Ltda.
Santiago

COLOMBIA
Manuel Trujillo Venegas e Hijo, Ltda.
Bogota 2, D. E.

DEMOCRATIC REPUBLIC OF THE CONGO
Rudolph-Desco Co., Inc.
New York

HONG KONG and MACAU
Gilman & Co., Ltd.
Hong Kong, B.C.C.

INDIA
Motwane Private Limited
Bombay, Calcutta, Lucknow, Kanpur, New Delhi, Bangalore, Madras

JAPAN
Midoriya Electric Co., Ltd.
Tokyo

KOREA
M-C International
San Francisco, Seoul

MALAYSIA
Vanguard Company
Kuala Lampur

MEXICO
Electronia Fredin S.A.
Mexico, 10 D. F.

NEW ZEALAND
W. & K. McLean Limited
Auckland

PAKISTAN
Pakland Corporation
Karachi

PERU
Importaciones y Representaciones Electronicas S. A.
Lima

PHILIPPINES
T. J. Wolff & Company
Makati, Rizal

REPUBLIC OF SOUTH AFRICA
G. H. Langler & Co., Ltd.
Johannesburg

SINGAPORE
Vanguard Company
Singapore

TAIWAN
Heighten Trading Co., Ltd.
Taipei

THAILAND
G. Simon Radio Company Ltd.
Bangkok

TURKEY
Mevag Engineering, Trading and Industrial Corporation
Istanbul

URUGUAY
Coasin Uruguaya S. A.
Montevideo

VENEZUELA
Coasin C. A.
Caracas

*GENERAL RADIO COMPANY (OVERSEAS)

Helenastrasse 3, CH-8034, Zürich 34, Switzerland

AUSTRIA
Dipl. Ing. Peter Marchetti
Wien

BELGIUM
Groenpol-Belgique S. A.
Bruxelles

DENMARK
SEMCO Semler & Co.
København Ø

EIRE
General Radio Company (Overseas)
General Radio Company (U.K.) Limited

FINLAND
Into O/Y
Helsinki

FRANCE
General Radio France
Paris, Lyon

GERMANY
General Radio GmbH
München
Norddeutsche Vertretung
Dr.-Ing. Nüsslein
Wedel

GREECE
Marios Dalleggio
Athens

ISRAEL
Eastronics Ltd.
Tel Aviv

ITALY
General Radio Italia S.p.A.
Milano

NETHERLANDS
Groenpol Groep Verkoop
Amsterdam

NORWAY
Gustav A. Ring A/S
Oslo

PORTUGAL and SPAIN
General Radio Company (Overseas)

SWEDEN
Firma Johan Lagercrantz KB
Solna

SWITZERLAND
Seyffer & Co. AG
Zürich

UNITED KINGDOM
*General Radio Company (U.K.) Limited
Bourne End, Buckinghamshire

YUGOSLAVIA
Sanford de Brun
Wien, Österreich

*Repair services are available at these offices.

PRINTED IN U.S.A.

GENERAL RADIO

WEST CONCORD, MASSACHUSETTS 01781